SOLID-STATE QRP PROJECTS

by EDWARD M. NOLL

W3FQJ

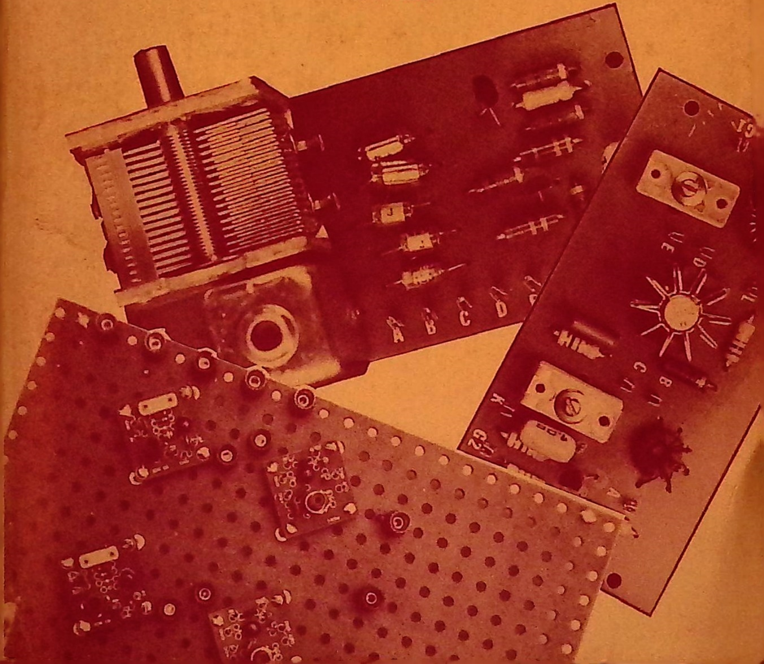

SOLID-STATE QRP PROJECTS

by Edward M. Noll, W3FQJ

STILL
W9MCT

EDITORS and ENGINEERS
Division HOWARD W. SAMS & CO., INC.
INDIANAPOLIS, INDIANA 46268

FIRST EDITION

FIRST PRINTING—1970

Library of Congress Catalog Card Number: 73-139479

Preface

The "CQ QRP" call is heard frequently on the amateur bands. Initially, a cw activity QRP operation is growing steadily in the phone segments. There are world-wide QRP clubs and QRP networks.

This trend is good for a number of reasons. Radio amateurs are learning solid-state technology because most QRP rigs include transistors. In general, radio amateurs and radio amateur organizations have been slow in accepting these fascinating and capable devices. QRP activity may be initiating a return to the science of home-brewing, the lack of which has brought some criticism of ham radio. QRP operations encourage the development of operating skill. You cannot bully your way through with a few watts.

Solid-State QRP Projects encourages these activities. The topics covered in this book are for the most part *QRPP* projects, which is another way of saying amateur operations with very, very little power. The units covered have power ratings from less than 100 milliwatts up to about 20 watts. A variety of solid-state oscillators, both crystal-controlled and vfo, are detailed. Some QRP test equipment is covered. Multistage cw transmitters can be constructed using the included date, permitting a bit more power and additional versatility. Both a-m and sideband circuits are presented.

The emphasis is on solid state. Bipolar transistors, field-effect transistors, and integrated circuits are the main characters. The financial burden is light in terms of the knowledge gained, the fun to be had, and the satisfaction of self-expression. Come on and join the act.

EDWARD M. NOLL, W3FQJ

Contents

SECTION 1

SECTION 2

SECTION 3

SECTION 4

SECTION 5

SECTION 6

SECTION 7

SECTION 8

Section 1

Introduction to Solid-State QRP

Solid-state devices have opened a new world of experimentation for the radio amateur. Here are possibilities for experimentation, from the very simple, up to levels of exceptional complexity. Much of this can be done at low cost using experiment-board techniques. All we need do is shake off the vacuum-tube phobia and relegate it to antiquity. The young ham can find a fascinating way to build his career in electronics by picking up the challenge of solid-state rather than fuss with vacuum-tube kits and factory-made relics of a bygone era.

The present enthusiasm for QRP communications affords an opportunity to acquire solid-state experience and fundamental knowledge in an enjoyable manner. The radio ham is in an enviable position because he can investigate both the receive and transmit facets of the solid-state science. Avenues of experimentation are endless.

SOLID-STATE DEVICES

Three devices important to the solid-state world are the bipolar transistor, the field-effect transistor, and the integrated circuit. All of these devices are readily available at low cost. The devices make possible the construction of compact and complex electronic circuits. However, in the learning process they need not be jam-packed so near to each other that change and experimentation are too difficult and, in some cases, not feasible. They will perform just as well on the more spacious surroundings of experiment boards providing more latitude for change and measurement. If you come up with something you would like to keep permanently, it can then be compacted on a small printed-circuit board.

BASIC OPERATION

The basic operations of both bipolar and field-effect transistors are illustrated in Fig. 1-1. The bipolar transistor has

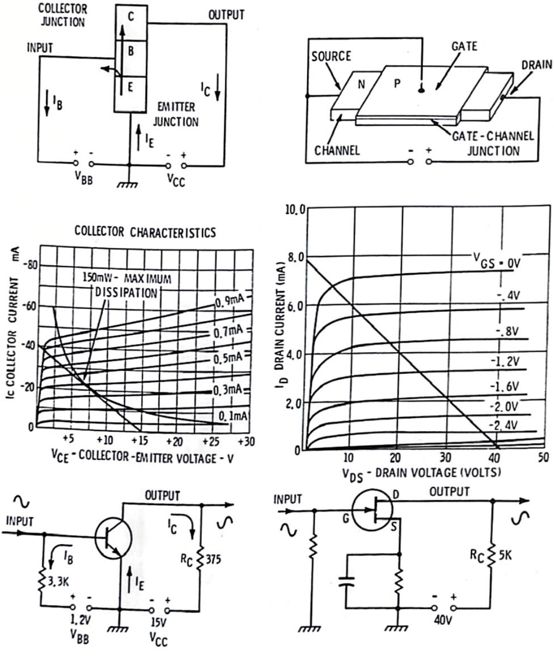

(A) Bipolar transistor.

(B) Field-effect transistor.

Fig. 1-1. Basic bipolar and FET operation.

two PN junctions, emitter and collector. The emitter junction is forward-biased; the collector junction, reverse-biased. When the emitter junction is forward-biased there is a motion of charges (current) across the junction. These charge carriers diffuse through the base and cross the collector junction even though it is reverse-biased. Their charge is such that they are attracted across the junction by the potential of the collector. A substantial current results.

The current division is as follows:

$$I_E = I_B + I_C$$

where,

I_B is base current,
I_C is collector current,
I_E is emitter current.

The ratio between the emitter current and the collector current is known as the transistor alpha (α).

$$\alpha = \frac{I_C}{I_E}$$

The alpha is always less than 1.

Note that the collector current is greater than the base current. The ratio between these two currents is known as the *figure of merit* or beta (β) of the transistor.

$$\beta = \frac{I_C}{I_B}$$

The collector current of a bipolar transistor is related to the collector voltage and the base current as shown in the typical collector characteristic curves. As the base bias current is increased with more emitter-junction forward bias, the collector current rises. If the base current is made to vary with signal there results a like and amplified change in the collector current. In the case of the common-emitter circuit of Fig. 1A, there is also a substantial voltage change across the output. This is greater than the voltage change applied to the input of the circuit. Therefore the common-emitter stage has gain.

A junction field-effect transistor has but one junction, which is between the gate and the continuous semiconductor channel between the source and the drain. For normal operation it is reverse-biased. The gate actually has a capacitive influence on the channel. The capacitive effect is such that a charge depletion area extends into the channel. The amount of reverse biasing of the gate determines the extent of the depletion activity and therefore the magnitude of the charge motion (current) between source and drain.

As the gate reverse bias is increased, the depletion area increases and lowers the conductance of the channel (increases the channel resistance). As a result the channel and output drain current decrease. If the reverse-bias voltage is made to vary, there results a substantial change in the drain current. This substantial drain-current variation in the common-source circuit of Fig. 1B produces a substantial voltage variation across the output. Since drain-voltage variation is greater than gate-voltage variation, the common-source stage has voltage gain.

The field-effect transistor is more vacuum-tube like than the bipolar transistor. Note that its gate-channel junction is reverse-biased and there is no significant gate current. This means it has a high imput impedance. Conversely, normal operation requires that the emitter junction of a bipolar transistor be forward-biased. Therefore the junction has a low resistance and the input impedance of a bipolar circuit is low.

In summary, the field-effect transistor is a high-impedance voltage-amplifying device, while the bipolar transistor is a low-impedance current-amplifying device. Both of these fundamental types have their advantages and disadvantages in solid-state circuitry. The field-effect transistor often has neutralization problems, but it places a substantially lighter load on any preceding circuit. In the present state of development the bipolar transistor is capable of handling more power at substantially lower cost. However, the field-effect transistor is less prone to distortion and the generation of spurious signal components.

THE BASIC TUNED AMPLIFIER

If a specific band of rf frequencies is to be amplified, the collector and drain resistors of Fig 1-1 are replaced by resonant circuits as shown in Fig. 1-2. These are the basic arrange-

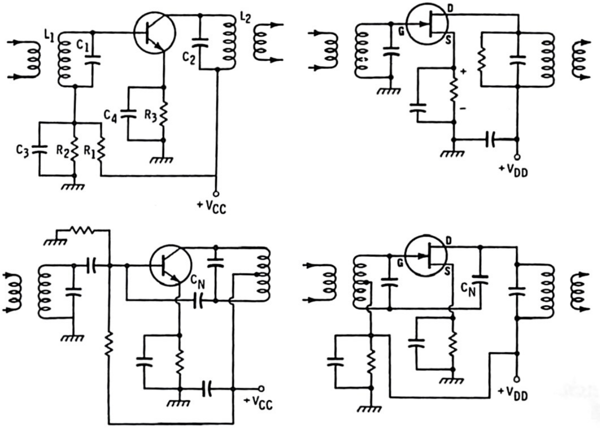

(A) Bipolar transistors.

(B) Field-effect transistors.

Fig. 1-2. Tuned rf amplifiers.

ments for bipolar and FET class-A rf amplifiers. Such circuits need be, or need not be, neutralized depending on transistor characteristics, loading, and frequency of operation.

Class-A stages are biased on the linear portions of the transfer characteristics. To do so the bipolar transistor must be forward-biased. This can be accomplished by using a two-resistor divider connected between the supply voltage and common. In the case of the NPN transistor of Fig. 1-2A the divider applies a positive bias to the base. A positive voltage is also applied to the collector through the drain resonant circuit. (If a PNP transistor were employed, the supply voltage would have to be of opposite polarity.)

Some forward biasing is also developed across the emitter resistor. However, its main responsibility is the stabilization of dc operating conditions. If left unbypassed or with only a portion of the emitter resistance bypassed, there is a controlled amount of ac degeneration available to improve the rf stability of the amplifier. In the case of power transistors of certain types, the presence of an emitter resistor also prevents a self-destruct condition called thermal runaway.

The field-effect transistor employs reverse gate-biasing for normal operation. Therefore it can be biased in a manner similar to vacuum tubes. In the top example of Fig. 1-2B a source resistor is used to obtain proper gate-source biasing. Drain-source current develops the required negative gate bias across the source resistor. Operation is identical to the development of vacuum-tube grid bias with a cathode resistor.

Often the FET stage uses a combination of source biasing and gate divider biasing as shown in the neutralized version of Fig. 1-2B. The source resistance is low in value and provides dc operating stabilization as well as a preferred amount of ac feedback stabilization.

The field-effect stage has a high input impedance and places a very light load on the preceding stage. It has less inherent distortion than the bipolar device and is often used in weak-signal amplifiers where the noise level is to be kept down and intermodulation distortion held to a very minimum.

Other basic circuit configurations are shown in Fig. 1-3. Bipolar transistors can be connected in the common-base configuration. Voltage gain is possible with the resonant circuit being connected in the collector output. No neutralization is required. The input is very low and the drive signal must be derived from a low-impedance source.

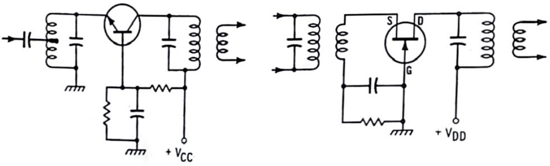

(A) Common-base. (B) Common-gate.

Fig. 1-3. Tuned amplifiers.

The common-gate configuration of Fig. 1-3B is quite like the grounded-grid connection of a vacuum tube. Input impedance is low and the output is the summation of output power plus the power supplied from the source of the input signal. This type of amplifier is more popular in the vhf-uhf spectrum than in the lower-frequency regions.

BIPOLAR CLASS-B AND CLASS-C AMPLIFIERS

Transistors like vacuum tubes can be operated in class A, B, or C. When a bipolar transistor is forward-biased class A, the bias point is usually centered on the linear portion of the transfer characteristic. In class-B biasing (Fig. 1-4) the bias point is at collector current cutoff. In class-C biasing, the base-emitter junction is reverse-biased beyond cutoff.

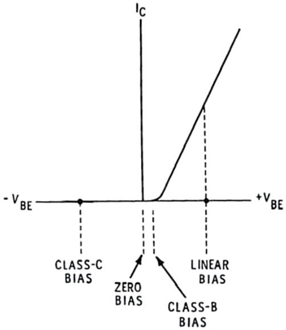

Fig.1-4. Biasing the bipolar transistor.

Except for class-B push-pull operation, a low-frequency amplifier biased class B or class C produces a distorted output. The output wave is no longer a good replica of the input wave. The above distortion restriction does not apply to tuned radio-frequency amplifiers and it is possible to bias a bipolar transistor amplifier class B or class C and still obtain an output wave that is undistorted. This is a result of the energy-storing ability of the output resonant circuit. Class-B and class-C amplifiers are more efficient than class-A types with obtainable efficiencies of 75 percent and higher in well-designed circuits.

When a transistor is biased class B or class C, the collector output current is present for only a portion of one alternation of the input rf wave. Thus the output current variation is a very much distorted version of the input rf signal. However, the presence of an output resonant circuit of appropriate characteristics results in an rf output voltage that is a reasonably undistorted version of the input voltage.

Two practical bipolar class-C amplifiers are shown in Fig. 1-5. When a bipolar transistor is connected with no forward bias present at its emitter junction it is already biased class-C. There is no collector current without the application of at least a small amount of forward bias. For germanium and silicon transistors the required forward biasing is approximately 0.2 volt and 0.7 volt respectively.

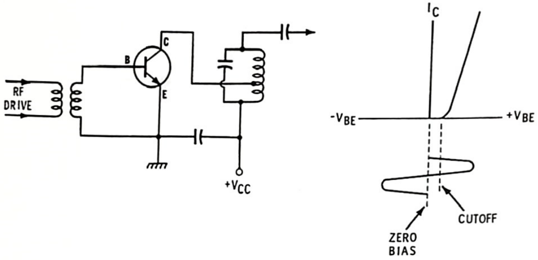

(A) No base-to-emitter bias.

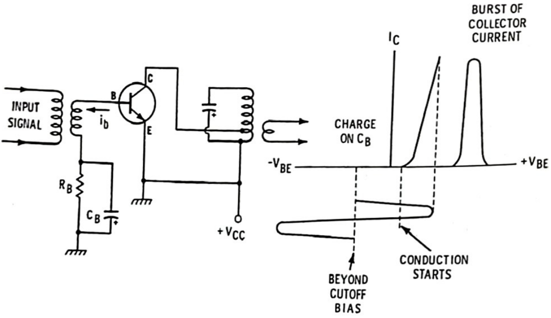

(B) Base circuit resistor-capacitor combination.

Fig. 1-5. Class-C biasing of bipolar stages.

In the circuit arrangement of Fig. 1-5A the stage is biased slightly class-C by simply using no base-to-emitter junction bias whatsoever. The amount of biasing is only slightly beyond the value of the class-B cutoff bias. This technique is used frequently in bipolar class-C power amplifiers.

In the arrangement of Fig. 1-5B there is a base circuit resistor-capacitor combination that establishes the cutoff biasing. In the case of the NPN stage shown, the more positive portion of the positive alternation of the input wave forward-biases the junction and results in a base current (i_b). The direction of the base current is such that the charge placed on the capacitor is a back bias and the emitter junction is reverse-biased significantly beyond cutoff value.

Approximate class-C waveforms are shown in Fig. 1-6. During the portion of the input wave that biases the emitter junction in a forward direction there is a strong but short interval of collector current. This burst of current contributes power to the output tank circuit. At this time when the tank capacitor is charged to a negative peak, the collector voltage is at minimum value.

It is important to recognize that with a strong input signal the peak collector current rises from zero to a very high peak value. Consequently there can be a substantial change in the collector voltage, and the power delivered to the oscillating resonant circuit is much greater than the signal power level delivered to the base of the transistor. The energy delivered to the tank circuit is stretched out because of the energy-storing capability. As a result sinusoidal rf voltage is developed across the tuned circuit.

The *Q* of the resonant circuit is of significance. The unloaded value should be as high as possible to obtain efficient operation of the tank circuit and to obtain maximum transfer of power from the tank to the load. The loaded *Q* of the resonant circuit should be relatively low to permit the efficient transfer of power, but it most not be too low, or the input voltage waveform becomes distorted (strong harmonics).

The attainment of a high unloaded *Q* is often difficult when using a power transistor because of the inherent low output impedance of the transistor. The problem can be circumvented by use of an appropriate output resonant circuit.

In the examples of Fig. 1-5, note that the collector is connected to a low-impedance point of the output resonant circuit. Therefore the transistor itself has a much lower loading effect. Likewise the energy for the low-impedance output is also taken off by a step-down transformer arrangement in the form of a few-turn secondary winding coupled closely to the low-impedance end of the resonant circuit. Other types of output circuits can be used to provide this low-impedance matching and efficient transfer of power such as L-filter, pi-network, combination pi and L, etc.

Quite often an emitter resistor is used to avoid thermal runaway and/or prevent too high a peak collector current or excessive power dissipation. The time constant of any base resistor-capacitor combination must be long in comparison to the period of the rf wave. In so doing the necessary dc component of class-C bias is developed. Resistive values are lower and power ratings higher, the higher the power dissipation capability of the transistor is.

Most important, recognize that with no bias applied to a bipolar transistor class-C amplifier there is no collector current. This is quite different from a vacuum-tube circuit which draws high current when the rf excitation is removed and there is no biasing. Removal of the rf excitation from the input of a bipolar class-C stage, of the type shown in Fig. 1-5, causes the collector current to drop to zero. This is a definite advantage in conserving power and in coming up with a simple way of keying a bipolar cw transmitter. If the oscillator circuit is keyed, for example, each succeeding class-C stage draws no current when the key is up. The oscillator itself draws a very minimum current with the key up.

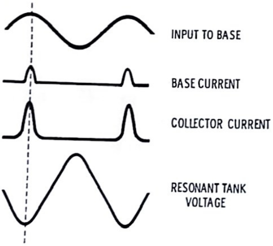

Fig. 1-6. Basic class-C waveforms.

CLASS-B AND CLASS-C FET AMPLIFIERS

The FET class-C amplifier is much more like a vacuum tube in its characteristics than is a bipolar stage. The bipolar stage has a low input impedance and must be driven from a low-impedance signal source. The input impedance of the FET stage is high, and, except when gate current is drawn, it can be driven from a low-power voltage source. As shown in Fig. 1-7A, a FET rf amplifier can be biased class B or class C using an external bias source. The curves are typical and show FET transfer characteristics and the level of voltage needed for cutoff biasing. A good output and very light loading of the succeeding stage is accomplished by making certain that on the positive alternation of the drive signal, the peak reaches up to a point just below the level of the gate current flow.

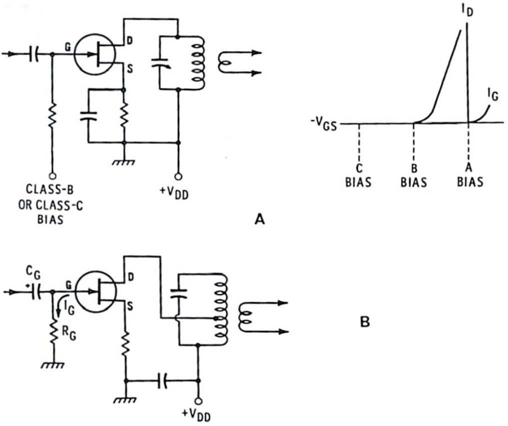

Fig. 1-7. FET class-B and class-C amplifiers.

In low-power FET stages there is no need for tapping the drain down on the tuned-circuit inductor. The output resistance of a small field-effect transistor is quite high.

A typical stage for a power field-effect transistor is shown in Fig. 1-7B. This arrangement uses the incoming signal to develop the class-C bias. Gate current is present in the gate resistor, and a negative dc charge develops on the gate capacitor when there is an incoming signal. The presence of the current lowers the input resistance and increases the input power requirement just as for a vacuum-tube class-C stage. The power field-effect transistor can have a rather low output resistance, and it is often appropriate to tap the drain onto the tuned-circuit inductor at a low-impedance point.

The field-effect class-C amplifier is like a vacuum-tube stage in still another way. You will find that when the rf excitation is removed from its input, the drain current rises just as the plate current of a similar vacuum-tube stage. It is advisable to use a protective source resistor which limits the drain current to a safe value when rf excitation is lost.

The high no-excitation drain current of the field-effect transistor is a disadvantage as compared to the no-collector-current characteristic of a similar bipolar stage. However, fewer distortion components are developed in the output of the FET amplifier, and its higher impedance as compared to the bipolar device presents fewer problems in the design of the output circuit.

BIPOLAR OSCILLATORS

A group of bipolar crystal oscillators are shown in Fig. 1-8. The Pierce crystal circuit is shown in A. A collector load can be a resistor or a radio-frequency choke. The Miller circuit is shown in B. It works out well for low-power and high-gain bipolar transistors. Performance is not nearly so good for the low-impedance power-type bipolar transistors—many won't start.

The most effective bipolar oscillator circuit is shown in C. It is Pierce-like but uses an output resonant circuit. This stage starts easily and supplies a good output. When using a power-type bipolar transistor the circuit of D is preferable. The collector is connected to a low-impedance point on the tuned-circuit inductor.

It should be noted that for all the bipolar oscillators a two-resistor base divider is needed to bias the transistor slightly in the forward direction. Recall that without bias the bipolar transistor is biased slightly beyond cutoff. Therefore the transistor oscillator would start erratically or not at all. The small amount of forward bias ensures easy starting. The bipolar crystal oscillator draws a minimum current when it is not oscillating. As soon as it goes into oscillation, the collector current rises.

FET CRYSTAL OSCILLATOR

A similar line up of FET crystal oscillators are shown in Fig. 1-9. Because of high impedances, especially the input impedance, FET circuits oscillate easily. The FET functions well in the Miller circuit as compared to a bipolar device. In the Pierce and the modified Pierce types it is sometimes necessary to use an extra capacitance between gate and common to improve efficiency and obtain higher output.

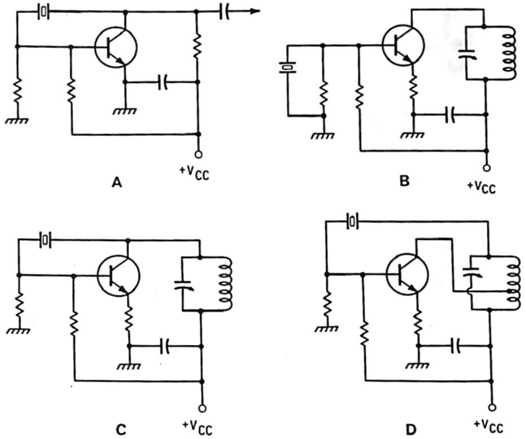

Fig. 1-8. Bipolar crystal oscillators.

No external biasing is needed. The resistor-capacitor combination develops oscillator bias. Recall that the field-effect transistor conducts with no applied bias. In fact, there is not too much of a differential between oscillate and nonoscillate conditions for many of the FET oscillator circuits.

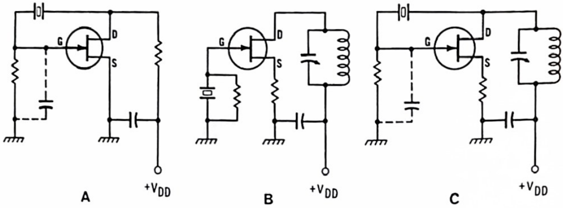

Fig. 1-9. FET crystal oscillators.

VARIABLE-FREQUENCY OSCILLATORS

Both the bipolar and field-effect transistors operate well in stabilized variable-frequency oscillator circuits such as the Clapp type shown in Fig. 1-10. The two circuits are quite similar, using two large value swamping capacitors from output to input and from input to common. These capacitors minimize

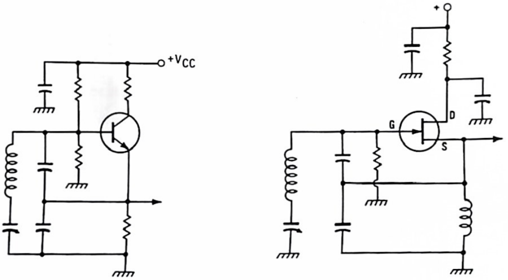

(A) Bipolar transistor.

(B) Field-effect transistor.

Fig. 1-10. Bipolar and FET vfo's.

the influence of device changes on the frequency-determining resonant circuit. Temperature compensating capacitors are often used across the resonant circuit capacitance to minimize heat influences. Output is usually derived from the low-impedance emitter or source circuits.

Section 2

Test Gear and Oscillators

Project 1. QRP Output Indicator

An output indicator is an essential piece of QRP test equipment. At power levels lower than several hundred milliwatts the usual form of rf indicator such as neon bulb, pilot lamp and pickup loop, SWR indicator, absorption wavemeter, etc. is not effective. However, these devices are useful when power levels of several watts and higher are reached.

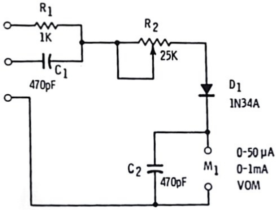

Fig. 2-1. Rf indicator

The indicator of Fig. 2-1 provides useful output readings when rf power output levels are considerably below 100 milliwatts. It is especially effective when it is necessary to obtain a power-output indication across impedances lower than 100 ohms. The low-impedance input terminals, although connected directly across the transmitter low-impedance antenna output, can be left connected when the transmitter is in operation and feeding power to the antenna.

Parts List—RF Indicator

No.	Item No.	Description
2	C_1, C_2	470-pF capacitors
1	D_1	1N34A diode
1	M_1	Current meter, 0–50 μA or 0–1 mA
1	R_1	1K ½-watt resistor
1	R_2	25K potentiometer
1		Transistor socket
5		Binding posts

A 25K potentiometer permits an adjustment of the sensitivity. With minimum resistance setting, the sensitivity is greatest. In this case the resistance of the path is the 1000-ohm input resistor, the diode, and the dc meter. This resistance is still high enough so that it will not remove any significant power from the low-impedance output. The very highest sensitivity is attained when the dc meter connected to the output has a 50- to 60-microampere movement. However, readings can be obtained with 100-milliwatt transmitters using a 0- to 1-milliampere dc meter. A volt-ohm-milliammeter (vom) provides some additional versatility because of a choice of current scales.

In obtaining rf readings at higher source impedances and/or if there is a source of dc voltage that must be blocked, the high-impedance input can be used. In this case the signal is applied to the indicator through a dc-blocking capacitor.

The unit can be mounted on a small 3-inch by 6-inch *Masonite* pegboard. Five binding posts can be used to provide convenience in use. You can work with more certainty and accomplish more in your QRP efforts with such an indicator as part of your test equipment.

Project 2. QRP Keying Monitor

As far as QRP "on-the-air" operations are concerned, it is again difficult to use the usual form of on-the-air monitor. It is true that for the very, very low power QRP transmitters the receiver itself can be used as a monitor. However, a number of inconveniences are involved, such as the necessity for retuning. Also split-frequency operation becomes very inconvenient.

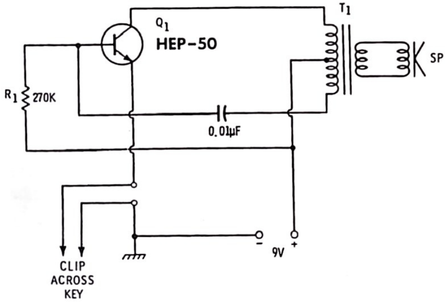

Fig. 2-2. Keying monitor.

Parts List—Keying Monitor

No.	Item No.	Description
1	C_1	0.01-μF capacitor
1	Q_1	Motorola HEP-50 transistor
1	R_1	270K resistor
1	SP	2½-inch speaker (Argonne AR-43 or equiv.)
1	T_1	Output transformer (Argonne AR-120 or equiv.)
4		Binding posts
1		Transistor socket

The monitor of Fig. 2-2 is a keyed audio oscillator. It is keyed in the emitter-to-ground circuit. This circuit can be connected to any QRP transmitter that is also keyed in the common return circuit. Thus when the sending key is depressed it closes the current return path to common for both the oscillator and the transmitter. A low output tone will be heard when the transmitter is keyed.

The monitor too can be mounted on a small 3-inch × 6-inch *Masonite* pegboard. If the board is made a bit larger, your key can be mounted right on the board. One needs only to run the necessary leads to the keying terminals of the transmitter. The combination of the keying monitor and the output indicator of Project 1 makes your QRP tuning and operations much more convenient.

Project 3. FET Miller Oscillator

A field-effect transistor connected in a Miller oscillator circuit is a very effective and easy-to-adjust QRP transmitter. Input power (dc) is about 100 milliwatts using a Siliconix U183 or a Motorola HEP-801 field-effect transistor. If a dc input power of ¼ to ½ watt is desired, the more expensive Siliconix U222 FET can be used.

Operation is possible on any band between 10 meters and 160 meters. However, a fundamental crystal must be employed.

The field-effect transistor is a high-impedance type. Therefore, design of the output resonant circuits is much less critical than it is for a bipolar transistor circuit. The coils consist of a parallel-resonant coil with a low-impedance secondary winding for connecting to a low-impedance antenna system, and they can be "home-brewed" using the data in the parts list. These coils can be used in many of the QRP rigs described in this book. The taps shown in the coil table are not used in this circuit (Fig. 2-3) but they will be required for later projects.

It should be noted that the power type field-effect transistors have a rather large capacitance. Therefore desired resonant frequency is reached with a much lower value inductance than is required by the lower-powered field-effect transistors. For example, in operating on 80-meters the 80-meter coil was used for the U183 and HEP-801 transistors. However, 80-meter resonance was obtained by plugging in the 40-meter coil when using the U222 power FET.

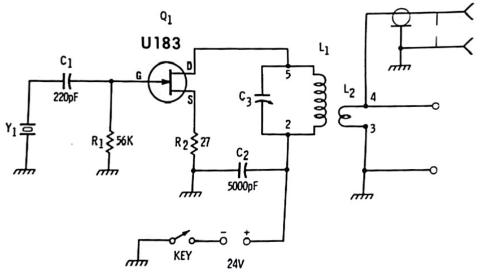

Fig. 2-3. FET crystal oscillator.

Good operating convenience is provided with a dual output. Connect the secondary to a pair of universal binding posts as well as to a coaxial receptacle. Therefore, both coaxial-line fed or parallel-line fed antennas can be employed. Your output indicator can also be connected to the two binding posts. It is only necessary to adjust the tuning capacitor for maximum meter reading with the antenna connected. When using a straight dipole or inverted dipole of reasonable height there is no trouble in establishing contacts of several hundred miles with a 100-milliwatt transmitter of this type. This little rig did it on 40, 80, and 160 meters.

Parts List—FET Crystal Oscillator

No.	Item No.	Description
1	C_1	220-pF capacitor
1	C_2	5000-pF capacitor
1	C_3	100-pF variable capacitor
1	Q_1	HEP-801 or U-183 FET
1	R_1	56K ½-watt resistor
1	R_2	27-ohm ½-watt resistor
1	L_1, L_2	Plug-in coils (see coil chart)
1	Y_1	Crystal in the desired frequency range
1		Coaxial output receptacle (SO-239)
1		Transistor socket
1		Crystal socket
4		Binding posts
1		Five-prong coil form for each band
1		Five-prong socket

The field-effect transistor operates with a higher dc voltage than most bipolar types. Therefore, a given dc power input can be obtained with a lower battery current. Power sources for all of the projects in this book were derived from 6- and 12-volt lantern batteries such as Eveready 731 and 732. When using the U183 or HEP-801, the transmitter, when properly loaded, drew between 4.5 and 5 milliamperes at 24 volts. Current increased to 25 to 30 milliamperes at 24 volts when using the U222.

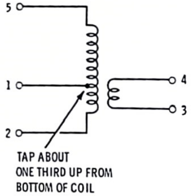

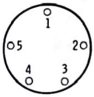

COIL FORM
BASE VIEW

Closewound on 1¼" Diameter Coil Form

	L_1	L_2
160	60 turns #26 enam. (tap at 20 turns)	8 turns #20 enam.
80	45 turns #22 enam. (tap at 15 turns)	6 turns #20 enam.
40	21 turns #22 enam. (tap at 7 turns)	4 turns #20 enam.
20	11 turns #22 enam. (tap at 4 turns)	3 turns #20 enam.
15	8 turns #20 enam. (tap at 3 turns)	2 turns #20 enam.
10	5½ turns #20 enam. (tap at 2 turns)	2 turns #20 enam.

Project 4. FET Pierce Crystal Oscillator

The Pierce crystal oscillator of Fig. 2-4 can serve as a utility oscillator for many QRP applications. The arrangement

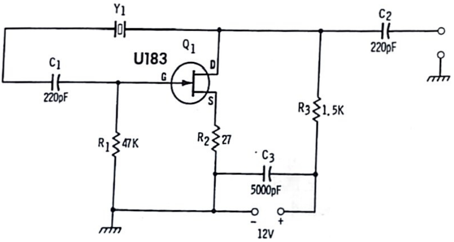

Fig. 2-4. Pierce crystal oscillator.

Parts List—Pierce Crystal Oscillator

No.	Item No.	Description
1	C_1	220-pF capacitor
1	C_2	220-pF capacitor
1	C_3	5000-pF capacitor
1	Q_1	HEP-801 or U-183 FET
1	R_1	47K ½-watt resistor
1	R_2	27-ohm ½-watt resistor
1	R_3	1500-ohm ½-watt resistor
1	Y_1	Crystal in desired frequency range
1		Crystal socket
1		Transistor socket
4		Binding posts

will oscillate on any fundamental crystal frequency from 1 to 100MHz. It takes advantage of the high-impedance characteristics of a field-effect transistor which provides easy starting and useful output signal.

The utility oscillator can be used to check out receiver calibration. It can be used to check out any variable-frequency QRP oscillators you may build up, or it can be used as a fundamental oscillator for any multistage QRP transmitter you may build up.

The oscillator requires so few components that it can be built on a 3-inch × 3-inch *Masonite* pegboard.

Project 5. 100 kHz—25 kHz Calibration Oscillator

Often a simple "home-brewed" receiver is a part of QRP operations. Frequency calibration can be a problem. This is especially true since there are now some special 25 kHz segments set off under the incentive licensing plan. Many of the lower-cost commercial ham receivers do not include a crystal calibrator. Thus the simple dual crystal oscillator of Fig. 2-5 can render a variety of services.

The circuit arrangement is quite unique in that two separate yet common-output crystal circuits are employed. Two oscillating crystal-controlled frequencies are possible, 100 kHz and 125 kHz. These two oscillators can be operated individually or jointly. When both are in operation there is also a 25-kHz dif-

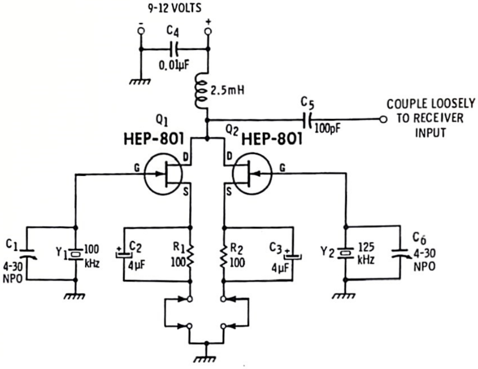

Fig. 2-5. Crystal calibrator.

ference frequency. As a result, 25-kHz calibration points can be heard in the receiver. These are distinct even in the 10-meter band.

In using the oscillator, the 100-kHz oscillator is first operated alone. There will be 100-kHz marker points over the radio amateur spectra. With the 125-kHz oscillator working alone there will be similar calibration points spaced each 125 kHz over the amateur spectrum. In fact, on the 80-meter band the 100-kHz oscillator operating alone will provide markers at 3.5, 3.6, 3.7, 3.8, 3.9, and 4-MHz. The 125-kHz crystal circuit operating alone provides markers at 3.5, 3.625, 3.75, 3.875, and 4 MHz.

When the two crystal oscillators are made to operate jointly, the presence of a 25-kHz difference component produces markers each 25-kHz over the entire 80-meter band. The same conditions apply on all bands through 10 meters.

Small variable capacitors (C_1 and C_6) are connected across the crystal sockets. Therefore each crystal can be preset carefully on one of the WWV frequencies. With both crystals in operation you can also hear a zero beat between them on any one of the WWV frequencies, or, for that matter, at appropriate multiples over the entire useful spectrum. When the two crystals are zero-beat together carefully on top of the WWV signal you also establish an exact 25-kHz difference fre-

Parts List—Crystal Calibrator

No.	Item No.	Description
1	C_1, C_2	4-30 NPO trimmers (Centralab 822-EN)
1	C_2, C_3	4-μF 15-volt capacitors
1	C_4	0.01-μF capacitor
1	C_5	100-pF capacitor
1	Q_1, Q_2	HEP-801 transistors
1	R_1, R_2	100-ohm ½-watt resistors
1	Y_1	100-kHz crystal
1	Y_2	125-kHz crystal
1		2.5-mH radio-frequency choke
2		Crystal sockets
2		Transistor sockets
7		Binding posts

quency. Thus the WWV signal has been used to calibrate both the 100-kHz and 25-kHz marks.

You will find the calibrator very useful in locating the 25-kHz subdivisions on the various amateur bands. However, it is important that the two fundamental frequencies be calibrated precisely so that an exact 25-kHz difference frequency is established.

Project 6. 15—40 Meter Tri-Tet Oscillator

A single-stage oscillator using a fundamental-frequency crystal can be operated on both 15 and 40 meters using a 40-meter crystal. This circuit is shown in Fig. 2-6. For 40-meter opera-

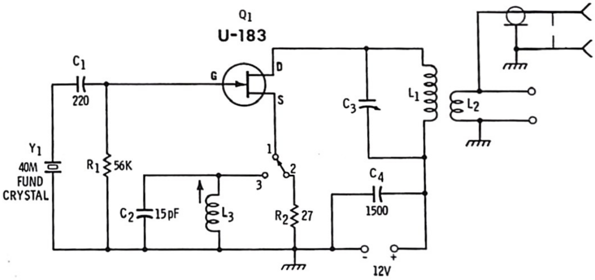

Fig. 2-6. 15–40 Tri-tet crystal oscillator.

tion a jumper is connected between binding posts 1 and 2. When operation on 15 meters is desired, the jumper is connected between binding posts 1 and 3.

When operated on 40 meters, the circuit is identical to that of the Miller crystal oscillator circuit of Fig. 2-3 in Project 3.

Parts List—15-40 TRI-TET Crystal Oscillator

No.	Item No.	Description
1	C_1	220-pF capacitor
1	C_2	15-pF capacitor
1	C_3	100-pF variable capacitor
1	C_4	1500-pF capacitor
1	Q_1	HEP-801 or U-183 FET
1	R_1	56K ½-watt resistor
1	R_2	27-ohm ½-watt resistor
1	L_1, L_2	Coil data in topic 3 (15-40 M)
1	L_3	35 to 56 μH inductor (Miller 21A475RB1)
1	Y_1	Forty-meter fundamental crystal
1		Crystal socket
1		Transistor socket
1		Coaxial receptacle (SO-239)
1		Five-prong coil socket
7		Binding posts

A 40-meter coil must be plugged into the output circuit. (Use a 20-meter coil if a U222 power FET is employed.)

When operation on 15 meters is desired, the 15-meter coil should be plugged into the drain circuit (10-meter coil when using a power FET).

The source circuit uses a slug-tuned coil. In association with the 15-pF fixed capacitor, this circuit should be resonated at a frequency which is approximately 0.7 times the 40-meter crystal frequency.

The tri-tet oscillator permits two-band operation with the same crystal. On 15 meters the frequency of operation is the third harmonic of the fundamental crystal frequency. For example, with a 7.06-MHz 40-meter crystal you will transmit on 21.18 MHz (3 × 7.06) on the 15-meter band. The first contact made with this little oscillator on 15 meters covered a distance of 860 miles, southeastern Pennsylvania to north-central Florida. Refer to Projects 1, 2, and 3.

Project 7. FET Pierce-Miller Combination Oscillator

The two fundamental oscillator circuits, Miller and Pierce, differ so little that a simple switching or jumper arrangement can be used to change over between the Pierce and Miller modes of operation. A simple arrangement of binding posts and jumpers is shown in Figs. 2-7 and 2-8. Pierce operation is obtained by connecting terminal 1 to terminal 3 and terminal 4 to terminal 5. This sets up the circuit of Fig. 2-4.

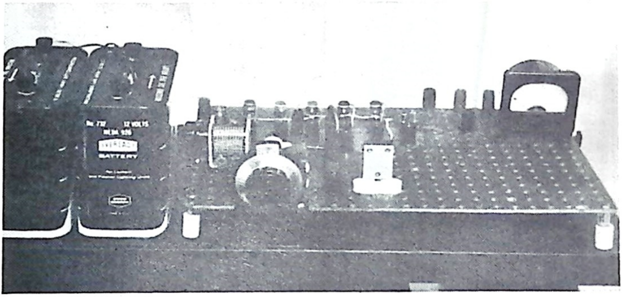

Fig. 2-7. Utility oscillator.

When the Miller mode is desired, terminal 1 connects to terminal 2 while terminal 4 is connected to terminal 6. This sets up a circuit similar to Fig. 2-3.

The resonant frequency of the tuned circuit is made to match the fundamental frequency of the crystal. The resonant circuit is quite similar to a pi network but uses a split capacitance. Capacitor C_1 has a significant influence on the resonant frequency of the tuned circuit while the ratio of C_1 and C_2 influences the matching to the antenna system. The output indicator can be wired in permanently as shown or can be the unit of Fig. 2-1, Project 1.

A photograph of the unit is shown in Fig. 2-7. Battery power is in the form of two 12-volt lantern batteries connected in series. The dc drain current is measured by a 0-15 mA dc meter.

A binding post and jumper arrangement is used to connect the right coil into the circuit according to the desired operating

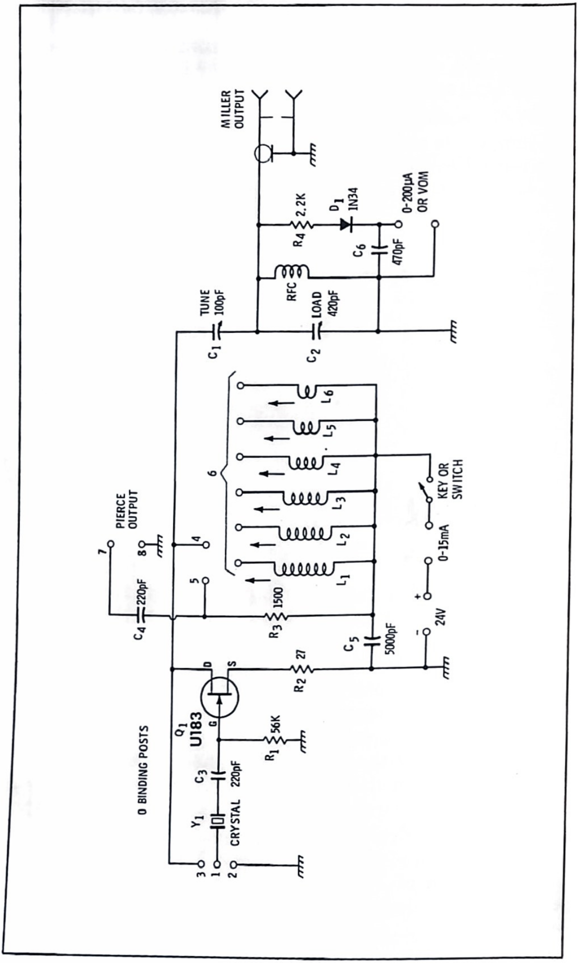

Fig. 2-8. Pierce—Miller practical circuit.

Parts List—Pierce-Miller Crystal Circuit

No.	Item No.	Description
1	C_1	100-pF variable capacitor
1	C_2	420-pF variable capacitor
2	C_3, C_4	220-pF capacitors
1	C_5	5000-pF capacitor
1	C_6	470-pF capacitor
1	D_1	IN34A diode
1	L_1	73–90 μH (J.W. Miller 21A825RBI)
1	L_2	16–26 μH (J.W. Miller 21A225RBI)
1	L_3	5–8 μH (J.W. Miller 21A686RBI)
1	L_4	1–1.8 μH (J.W. Miller 21A156RBI)
1	L_5	0.88–1.2 μH (J.W. Miller 21A106RBI)
1	L_6	0.24–0.4 μH (J.W. Miller 20A337RBI)
1	L_7	2.5-mH radio-frequency choke
1	Q_1	HEP-801 or U183 FET
R	R_1	56K ½-watt resistor
1	R_2	27-ohm ½-watt resistor
1	R_3	1500-ohm ½-watt resistor
1	R_4	2.2K ½-watt resistor
1		Crystal socket
1		Transistor socket
1		Coaxial receptacle (SO-239)
12		Binding posts

frequency. In the version shown in Fig. 2-8 a set of J. W. Miller amateur band coils was used. These cover bands 10 through 160 meters. Refer to Projects 1, 2, 3, and 4.

Section 3

Bipolar and FET Transmitters

Project 8. FET MOPA Transmitter

A simple FET MOPA rig is shown in Fig. 3-1. It consists of a Pierce crystal oscillator and a follow-up class-C FET amplifier. In fact, it is possible to add the amplifier to the circuit of Fig. 2-8. A very versatile combination is then possible.

A system of binding posts and jumpers permit operation as a Pierce crystal oscillator, a Miller crystal oscillator, or a Pierce crystal oscillator and class-C amplifier combination (MOPA). The jumper connections that set up the various circuits are given in the schematic diagram.

Parts List—Utility Oscillator and MOPA

No.	Item No.	Description
1	C_1	100-pF variable capacitor
1	C_2	420-pF variable capacitor
2	C_3, C_4	220-pF capacitors
1	C_5	5000-pF capacitor
2	C_6, C_7	470-pF capacitors
1	D_1	IN34A diode
1	J_1	Coaxial receptacle
1	L_1	73–90 μH (J.W. Miller 21A825RB1)
1	L_2	16–26 μH (J.W. Miller 21A225RB1)
1	L_3	5–8 μH (J.W. Miller 21A686RB1)
1	L_4	1–1.8 μH (J.W. Miller 21A156RB1)
1	L_5	0.88–1.02 μH (J.W. Miller 21A106RB1)
1	L_6	0.24–0.4 μH (J.W. Miller 21A337RB1)

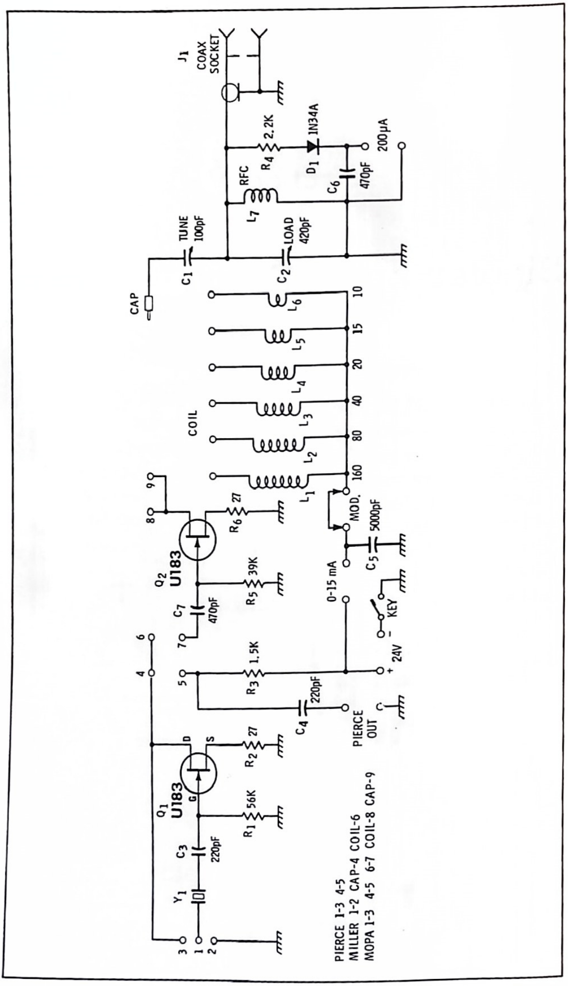

Fig. 3-1. Utility oscillator and MOPA.

Parts List—Utility Oscillator and MOPA (Cont'd.)

No.	Item No.	Description
1	L_7	2.5-mH radio-frequency choke
2	Q_1, Q_2	HEP-801 or U183 FET
1	R_1	56K ½-watt resistor
1	R_2	27-ohm ½-watt resistor
1	R_3	1500-ohm ½-watt resistor
1	R_4	2.2K ½-watt resistor
1	R_5	39K ½-watt resistor
1	R_6	27-ohm ½-watt resistor
24		Binding posts
1		Crystal socket
2		Transistor sockets

Two U183 field-effect transistors are very effective and permit operation on every band 10 through 160 meters. Binding posts for adding modulation are included. For cw operation a jumper is inserted between them. Refer to Projects 1, 2, 3, 4, and 7.

Project 9. 100-Milliwatt FET Modulator

A very simple two-stage FET amplifier can provide the necessary power for modulating a 100-milliwatt transmitter.

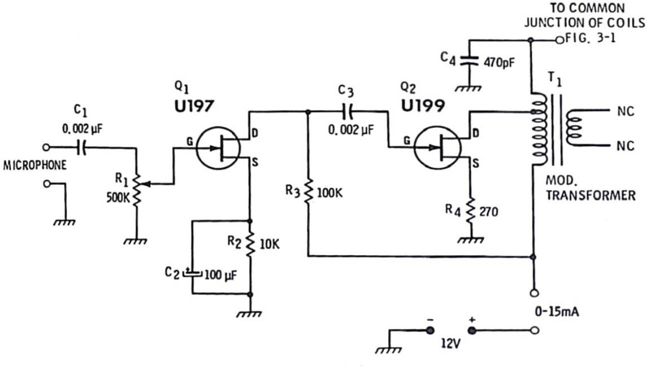

Fig. 3-2. Modulator for 100-milliwatt transmitters.

Parts List—Modulator 100-mW Transmitter

No.	Item No.	Description
1	C_1	0.002-μF capacitor
1	C_2	100-μF 15-volt electrolytic capacitor
1	C_3	0.002-μF capacitor
1	C_4	470-pF capacitor
1	Q_1	U197 FET
1	Q_2	U199 FET
1	R_1	500K potentiometer
1	R_2	10K ½-watt resistor
1	R_3	100K ½-watt resistor
1	R_4	270-ohm ½-watt resistor
1	T_1	Modulation transformer (Lafayette HP-61 or equiv.)
7		Binding posts
1		High-impedance microphone
2		Transistor sockets

The circuit of Fig. 3-2 uses an input speech amplifier and a power-output modulator stage. Use a high-impedance and high-output microphone such as a crystal, ceramic, or high-impedance velocity type.

The input stage is a voltage amplifier, developing the necessary signal drive for the output stage from the low voltage output of the microphone. The output stage uses an autotransformer modulation transformer. This provides the needed voltage step-up and impedance matching.

The 100-milliwatt transmitter of Fig. 3-1 has its final stage operating with about 4.5 milliamperes at 24 volts. Direct-current input impedance to the modulated stage is about 5000 ohms. Optimum load for the U199 FET is somewhat less. Acceptable match is obtained using one of the autotransformers incorporated in some of the earlier vacuum-tube citizens-band models. These can be ordered from the various wholesale electronics catalogs.

Project 10. Three-Quarter Watt FET Transmitter

A Pierce crystal oscillator followed by a simple class-C amplifier can be used for all-band operation. Direct-current input power to the U222 amplifier for the transmitter of Fig. 3-3 falls between ½ and ¾ watt, depending on the antenna loading.

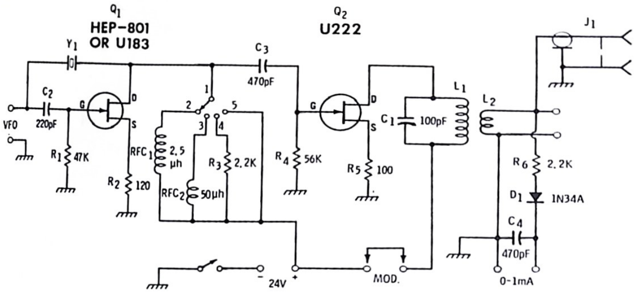

Fig. 3-3. Three-quarter watt FET transmitter.

Parts List—Three-Quarter Watt FET Transmitter

No.	Item No.	Description
1	C_1	100-pF variable capacitor
1	C_2	220-pF capacitor
2	C_3, C_4	470-pF capacitor
1	D_1	IN34A diode
1	J_1	Coaxial receptacle (SO-239)
1	L_1, L_2	See coil data, project 3
1	Q_1	HEP-801 or U222 FET
1	Q_2	U222 FET
1	R_1	47K ½-watt resistor
1	R_2	120-ohm ½-watt resistor
1	R_3	2.2K ½-watt resistor
1	R_4	56K ½-watt resistor
1	R_5	100-ohm ½-watt resistor
1	R_6	2.2K ½-watt resistor
1	rfc_1	2.5-mH radio-frequency choke
1	rfc_2	50-μH radio-frequency choke
12		Binding posts
1		Crystal socket
2		Transistor sockets

A jumper and binding-post combination permits the selection of an appropriate load for the drain circuit of the Pierce crystal oscillator. On 40, 80, and 160 meters, use the 2.5-mH radio-frequency choke. More drive for the output is possible using the smaller rfc for the 10-, 15-, and 20-meter bands. A fundamental-frequency crystal must be employed.

Two binding posts are provided to permit drive from an external variable-frequency oscillator (vfo). In this case the crystal must be removed from its socket. The crystal stage then becomes a buffer and amplifier during vfo operation. It can also be used as a frequency multiplier if desired by connecting an appropriate resonant circuit (tuned to the proper harmonic) between binding posts 1 and 5.

Binding posts are also included for the addition of amplitude modulation later. For cw operation, a jumper is connected between the modulation binding posts. Again the output indicator can be built in as shown, or you can use the indicator described in Project 1.

When operating on the 40-, 80-, and 160-meter bands the drive from a low-power HEP-801 is adequate. However, when operating on the 10-, 15-, and 20-meter bands, it is advisable to use a U222 in the crystal circuit to obtain some additional drive for the final amplifier. Refer to Projects 1, 2, 3, and 4.

Project 11. IC Modulator

A single RCA CA3020 integrated circuit can serve as a speech amplifier and modulator for the ¾-watt transmitter of Fig. 3-3. The functional block and schematic diagrams of the CA3020 are given in Fig. 3-4. The integrated circuit consists of an isolating input stage (transistor Q_1), a differential amplifier (transistors Q_2 and Q_3), an audio driver (transistors Q_4 and Q_5), and, finally, a power-output stage (transistors Q_6 and Q_7). It also includes a built-in voltage regulator.

The schematic diagram of the actual modulator is given in Fig. 3-5. Integrated circuits can be understood very easily if you compare the actual circuit diagram with the internal diagram of the unit. Microphone signal is applied to terminal 10 which is the base of the input transistor. A 5000-ohm potentiometer is connected between terminal 1 and common. This serves as the emitter resistor of the input transistor (Q_1) and also as the audio gain control. Microphone signal is coupled through capacitor (C_1) to terminal 3, which is the input to the differential amplifier. The equal-amplitude and opposite-polarity outputs of the differential amplifier as made available at the

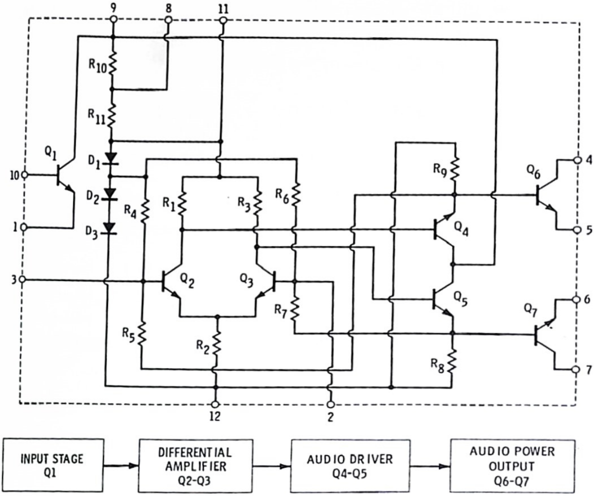

Fig. 3-4. Internal schematic and functional plan of RCA-3020.

Parts List—IC Modulator

No.	Item No.	Description
1	C_1	0.01-μF capacitor
1	C_2	3-μF capacitor
1	C_3	5-μF capacitor
1	C_4	0.01-μF capacitor
1	C_5	470-pF capacitor
1	IC_1	CA3020 IC (RCA)
1	R_1	5K potentiometer
1	R_2	470K ½-watt resistor
1	T_1	Output transformer (200 CT to 500 CT) (Knight 6T54 HE or equiv.)
6		Binding posts
1		High-impedance microphone
1		12-Pin TO-5 socket

collectors of transistors Q_2 and Q_3 are direct-coupled to the bases of audio drive transistors Q_4 and Q_5, whose emitter outputs are direct-coupled to the bases of the power output stage. Terminals 5 and 6 connect with the emitters of the power output stage and in the power output circuit these points are returned to common.

Maximum output capability approximates 350-400 mW. However, the output can be regulated with the input gain control. The power needed to modulate the transmitter is about 300 to 350 milliwatts.

When the transmitter is loaded properly the final drain current is about 22 to 32 milliamperes. Inasmuch as the drain voltage is 24 volts, the dc power input is:

$$P = E_{DD}I_D = 24 \times 0.03 = 720 \text{ milliwatts}$$

The required audio power for 100-percent modulation is 50 percent of the dc input power, or 360 milliwatts. The audio modulator must work into a resistance of:

$$R_D = \frac{E_{DD}}{I_D} = \frac{24}{0.03} = 800 \text{ ohms}$$

Capacitors C_1 and C_2 influence the low-frequency response. Capacitor C_4 determines the high-frequency roll-off. Values have been selected to pass the voice-frequency range.

Transformer T_1 must match the modulator audio output to the dc input resistance of the modulated amplifier. This value

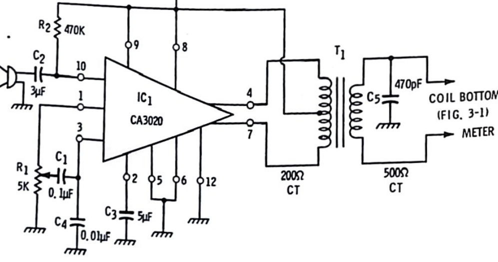

Fig. 3-5. IC modulator.

of between 500 and 800 ohms is the resistive component that is present across the MOD input terminals of the transmitter of Fig. 3-3. Proper loading of the modulator output occurs when it sees about 180 to 300 ohms. Transistor driver transformers of various types meet this requirement provided the secondary is connected into the output of the modulator while the primary is connected across the MOD input terminals of the transmitter.

The transmitter and modulator combination can be operated in a number of ways. If the transmitter is operated at 12 volts, adequate modulation power is supplied with the modulator operating at 6 volts instead of the 12 volts as shown in Fig. 3-5. For 12-volt operation of the modulator it is necessary to mount a heat sink on the CA3020 integrated-circuit case. It is also a good idea to mount a heat sink on the final amplifier transistor of the transmitter when it is operated at 24 volts.

The CA3020 integrated circuit is mounted in a standard TO-5 case. If you wish, the modulator can be mounted directly on the transmitter pegboard. A 12-pin integrated circuit socket is required. Refer to Projects 1, 2, 3, 4, and 10.

Project 12. 10-160 Push-Pull FET Oscillator

Considerable power output can be obtained by connecting two field-effect transistors in push pull (Fig. 3-6). Two U183's or HEP-801's operate with about 250 milliwatts of dc input. For about 3 watts of dc input and about one watt of rf output use two U222's in the circuit.

A small variable capacitor is connected in series with the crystal. As a result the oscillator frequency can be changed between several hundred and several thousand Hertz, depending on frequency. This capability often permits you to duck out from under a bad QRM situation which is of great importance when operating QRP equipment.

Plug-in coils are employed. The primary winding is split in half and the low-impedance secondary coil wound between the two sections. Coil data is given in the chart or a commercially made coil set can be used if available.

Good output is obtained on all bands 10 through 160 meters. On 10 meters the U183's oscillate more strongly than the HEP-801's. Refer to Projects 1, 2, 3, and 8.

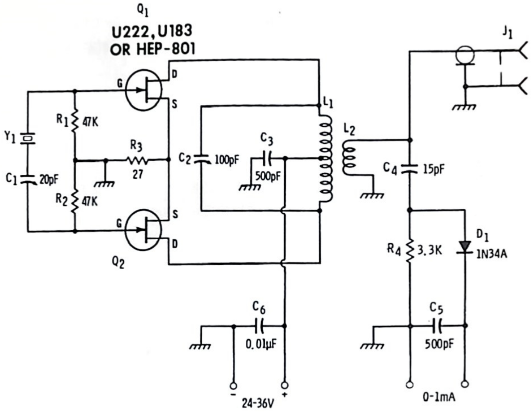

Fig. 3-6 Push-pull FET oscillator.

Parts List—Push-Pull FET Oscillator

No.	Item No.	Description
1	C_1	20-pF variable capacitor
1	C_2	100-pF variable capacitor
1	C_3	500-pF capacitor
1	C_4	15-pF capacitor
1	C_5	500-pF capacitor
1	C_6	0.01-μF capacitor
1	D_1	IN34A diode
1	J_1	Coaxial receptacle
1	L_1, L_2	Coils as in chart
2		Transformer sockets
1	Q_1, Q_2	U183, HEP-801, or U222 FET's
2	R_1, R_2	47K ½-watt resistors
1	R_3	27-ohm ½-watt resistor
1	R_4	3.3K ½-watt resistor
5		Binding posts
1		Crystal socket
1		Five-prong coil socket

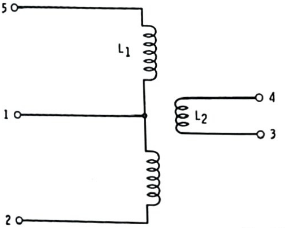

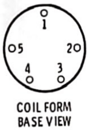

Close-Wound on
1¼" Dia. Coil Form

Band	L_1	L_2
160	60 turns #26 enam. center-tapped	12 turns #26 enam.
80	45 turns #22 enam. center-tapped	8 turns # 26 enam.
40	21 turns #22 enam. center-tapped	4 turns #20 enam.
20	11 turns #22 enam. center-tapped	3 turns #20 enam.
15	8 turns #20 enam. center-tapped	2 turns #20 enam.
10	5½ turns #20 enam. center-tapped	2 turns #20 enam.

Project 13. Single-Transistor MOPA

Mail-order houses and bargain transistor sources often advertise dual transistors. Two transistors are mounted in the same case. One of these types is the 2N2060. This is quite an

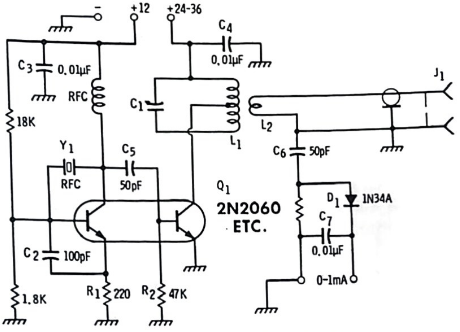

Fig. 3-7. Single-transistor MOPA.

Parts List—Single-Transistor MOPA

No.	Item No.	Description
1	C_1	365-pF variable capacitor
1	C_2	100-pF capacitor
1	C_3, C_4	0.01-μF capacitor
1	C_5	50-pF capacitor
1	C_6	50-pF capacitor
1	C_7	0.01-μF capacitor
1	D_1	IN34A diode
1	J_1	Coaxial receptacle
1	L_1, L_2	Set of coils as in Project 3
1	Q_1	Dual transistor (2N2060, etc.)
1	R_1	220-ohm ½-watt resistor
1	R_2	47K ½-watt resistor
1	R_3	2.2K ½-watt resistor
1	RFC_1	2.5 mH radio-frequency choke
5		Binding posts
1		Crystal socket
1		Transistor socket or fahnestock clips

expensive differential device and includes two transistors with most indentical characteristics. These can often be found at argain price of approximately one dollar. Probably many ot pass inspection because the two segments are not really tical. However, this is an unimportant consideration for io amateur operation as a combination crystal oscillator and amplifier. The rating of the 2N2060 is about 1 to 2 watts per section, permitting a possible rf output of ¼ to ½ watt.

The schematic diagram is given in Feb. 3-7. The one section of the duo is a Pierce crystal oscillator; the second section, an rf amplifier. A single tuned circuit is employed. Use the coil data given in Project 3. The crystal circuit is operated at 12 volts. The amplifier section can be operated between 24 and 36 volts. Good results are obtained on 20, 40, 80, and 160 meters. The amplifier can operate as a doubler to obtain 20-meter output from the 40-meter crystal. Refer to Projects 1, 2, 3, 8, and 10.

Project 14. 40-80-160 Variable-Frequency Oscillator (VFO)

The variable-frequency oscillator has advantages for QRP operation. One can move on top of a station calling CQ or terminating a QSO. It is also possible to move out from under QRM and high-powered stations. A very simple vfo can be used as a drive signal for many of the QRP transmitters covered in this book.

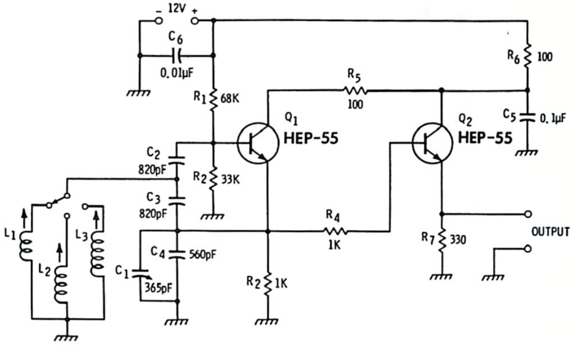

Fig. 3-8. 40–80–160 vfo.

It is important that a vfo be stable so that it will not drift or jump frequency. Two factors have a great influence on stability; these are electrical design and mechanical rigidity. The electrical stability requires a well-regulated power supply and the use of one of the high-stability oscillator circuits such as Clapp, Vackar, Seiler, and others. Mechanical stability depends on the selection of parts and a firm and rigid construction. A good quality variable capacitor is essential. Proper shielding and an isolated tuning shaft are important in reducing hand-capacity effects.

The vfo of Fig. 3-8 uses bipolar transistors. The first stage is a Seiler-type oscillator with separate inductors for 40, 80, and 160 meters. Coil data is given in the parts list.

The output stage is connected as an emitter follower to present a light load to the oscillator and a low-impedance output. A battery provides a stable dc power source.

With the component values shown the variable capacitor is able to tune over the entire 40-, 80- and 160-meter bands using the appropriate coil. Proper band coverage is obtained by adjusting the slugs of the three inductors. If you wish to tune

Parts List—40-80-160-VFO

No.	Item No.	Description
1	C_1	365-pF variable capacitor
2	C_2, C_3	820-pF silver-mica capacitors
1	C_4	560-pF silver-mica capacitor
1	C_5	0.1-μF capacitor
1	C_6	0.01-μF capacitor
1	L_1	0.735–0.984 μH coil (J.W. Miller 20A827RB1)
1	L_2	2.38–3.96 μH Coil (J.W. Miller 21A336RB1)
1	L_3	10.8–18 μH Coil (J.W. Miller 21A155RB1)
2	Q_1, Q_2	HEP-55 transistors
1	R_1	68K ½-watt resistor
1	R_2	33K ½-watt resistor
2	R_3, R_4	1K½-watt resistors
2	R_5, R_6	100-ohm ½-watt resistors
1	R_7	330-ohm ½-watt resistor
4		Binding posts
2		Transistor socket

finely over only a segment of one of the bands an additional 20-pF variable capacitor can be connected in parallel with the 365-pF variable. The vfo, like a crystal oscillator, can be keyed in the supply voltage line.

Project 15. VFO Amplifier and Doubler

The output of the vfo covered in Project 14 can be used to drive a field-effect rf amplifier (Fig. 3-9). The combination

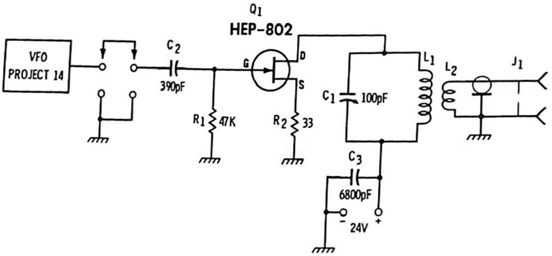

Fig. 3-9. VFO amplifier and doubler.

Parts List—VFO Amplifier and Doubler

No.	Item No.	Description
1	C_1	100-pF variable capacitor
1	C_2	390-pF capacitor
1	C_3	6800-pF capacitor
1	J_1	Coaxial receptacle
1	Q_1	HEP-802 FET
1	L_1, L_2	Coil set of Project 3
1	R_1	47K ½-watt resistor
1	R_2	33-ohm ½-watt resistor
4		Binding posts
1		Transistor socket
1		Vfo of Project 14

will then operate as a QRP transmitter on the 20-, 40-, 80-, and 160-meter bands. It is possible to operate on any frequency in these four bands. The dc input power is approximately 150 milliwatts.

You may wish to mount the amplifier on the same mounting board as the vfo or as a separate amplifier that can be operated from a crystal-controlled oscillator or a vfo. Coil data is given in Project 3. The field-effect transistor is the high-frequency HEP-802. This transistor operates as an efficient doubler on 20 meters. On the other three bands the amplifier is tuned to the fundamental frequency of the vfo. Refer to Projects 1, 2, 3, 8, 10, and 14.

Project 16. Bipolar 40—80 One Watter

There are a number of power bipolar transistors (in TO-5 cases) that function well as low-frequency oscillators. One of these is the popular 2N3053. As a function of circuit and supply voltage, dc power inputs between one-half and two watts are feasible in an oscillator circuit. A somewhat modified oscillator circuit is used for the power transistor as shown in Fig. 3-10. The crystal is connected between collector and base while a resonant circuit is present in the collector circuit. In the example shown it is a pi network. The inductor is tapped to provide both 40- and 80-meter operation.

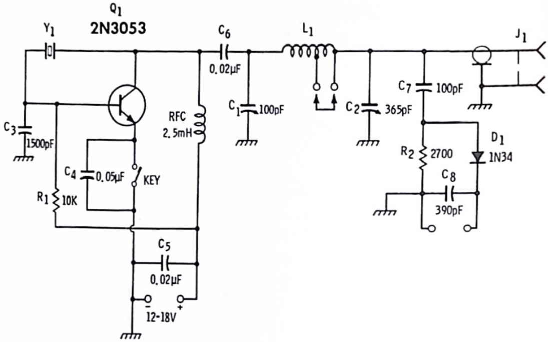

Fig. 3-10. 40–80 one-watter.

Parts List—40-80 One-Watter

No.	Item No.	Description
1	C_1	100-pF variable capacitor
1	C_2	365-pF variable capacitor
1	C_3	1500-pF capacitor
1	C_4	0.05-μF capacitor
2	C_5, C_6	0.02-μF capacitor
1	C_7	100-pF capacitor
1	C_8	390-pF capacitor
1	D_1	IN34A diode
1	J_1	Coaxial receptacle (SO-239)
1	L_1	46 turns #20 3″ length tapped at 15th turn (B & W 3015 or Air Dux 816T)
1	Q_1	2N3053 transistor
1	R_1	10K ½-watt resistor
1	R_2	2700-ohm ½-watt resistor
1	RFC	2.5 mH radio-frequency choke
10		Binding posts
1		Crystal socket
1		Transistor socket

The dc input power using 18 volts of battery is about 1.5 watts when the output is loaded properly to a 50- or 70-ohm antenna system. It is advisable to place a heat sink over the 2N3053 case.

A bipolar transistor is quite a nonlinear device in this type of circuit and can even operate readily as an audio oscillator at the same time it is generating an rf signal. For this reason the peak reading on the output indicator is often misleading. It is advisable to listen to your own signal as you adjust the tuning capacitor. If there is a tone on the carrier or pairs of close-spaced sidebands you will be able to tune them out by adjusting the tuning capacitor slightly to the high-frequency side of the setting which produces maximum output reading.

This circuit is quite popular among QRPers because it is basically a very simple means of obtaining a watt or so of QRP power. The inductor is a Barker and Williamson 3015 coil. The entire coil is used for 80-meter band operation. Tap the coil about one-third down for 40-meter operation. Two binding posts and a jumper can be used for band changing. Refer to Projects 1, 2, 3, and 4.

Project 17. 10 160 All-Band Two Watter

The 2N3053 bipolar power transistor can also be connected into a circuit using plug-in coils as shown in Fig. 3-11. This oscillator will operate on all six bands, 10 through 160 meters, using fundamental crystals. The dc input on the low-frequency bands is about 2 watts, tapering down to about 1 watt on 10 meters using 12 to 18 volts of supply voltage. The oscillator

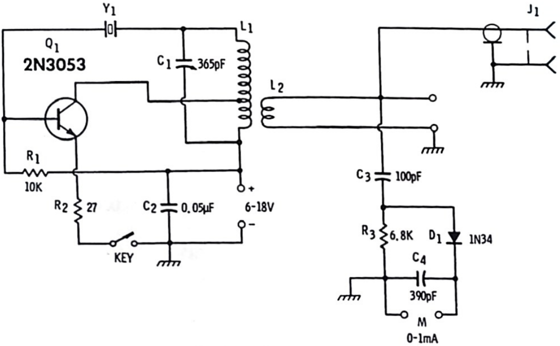

Fig. 3-11. 10–160 two-watter.

Parts List—All-Band 10-160 Two-Watter

No.	Item No.	Description
1	C_1	365-pF variable capacitor
1	C_2	0.05-μF capacitor
1	C_3	100-pF capacitor
1	C_4	390-pF capacitor
1	D_1	IN34A diode
1	J_1	Coaxial receptacle (SO-239)
1	L_1, L_2	Set of coils (Data in Project 3)
1	Q_1	2N3053 transistor
1	R_1	10K ½-watt resistor
1	R_2	27-ohm ½-watt resistor
1	R_3	6.8K ½-watt resistor
6		Binding posts
1		Crystal socket
1		Five-prong coil socket
1		Transistor socket

operates very efficiently and good output is obtained. The keying is very clean.

Coil data is given in the chart associated with Project 3. These are wound on a five-prong coil forms. If they can be obtained, the B&W 25-watt MCL coils function very well. Connect the coil center tap to the collector. The output level on 10 and 15 meters for this little oscillator is quite a surprise. In fact, an RST 339 report was obtained from G3EBH, Lincoln, England. Refer to Projects 1, 2, 3, and 15.

Project 18. All-Band VFO

The field-effect transistor is ideal for use in stable oscillator circuits. It oscillates easily, has high stability and lends itself well to the construction of multiband variable-frequency oscillators. Such a circuit is shown in Fig. 3-12. Operation is possible on all bands 10 through 160 meters.

The oscillator is similar to the Seiler configuration. Stability and feedback are taken care of by capacitors C_4 and C_5. Resonant frequency is established with the set of five inductors and capacitors C_1 and C_2. Capacitor C_3 has influence on frequency and the bandwidth over which the variable capacitor tunes.

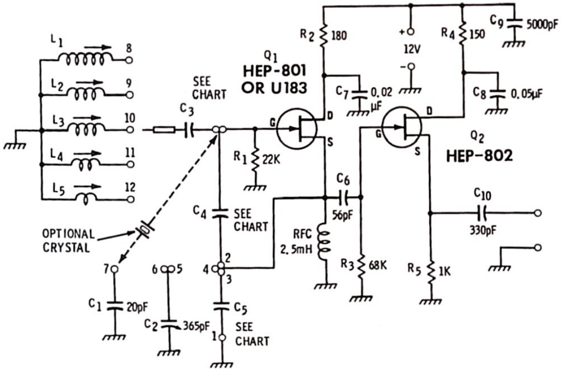

Fig. 3-12. All-band FET VFO.

Output is removed from across the source radio-frequency choke and is applied to the gate of the succeeding source follower. This stage offers isolation and a low-impedance output.

Binding posts provide an easy method of band-changing for the vfo. This idea is shown in Fig. 3-12. Capacitors C_3, C_4, and C_5 are replaceable, and when an appropriate set is determined for a given band, banana plugs are attached to their leads. Mounting arrangement must be rigid. They can be inserted into the binding posts according to the frequency of operation desired.

Capacitor C_4 is inserted between binding posts 1 and 2, and capacitor C_5 is inserted between binding post 3 and common. When capacitor C_2 is to be used alone a jumper connects between binding posts 4 and 5. Usually this capacitor is used alone on the 40, 80, and 160 meter bands. On the higher frequency bands, 20, 15, and 10 meters, capacitor C_1 is also in the circuit. A jumper must then be connected between binding posts 6 and 7. Capacitor C_3 is connected between binding post 13 and the coil for the desired band.

The chart states the values of the various components for each of the six bands. On 160 meters capacitor C_2 tunes over approximately 75 kHz. The exact 75-kHz segment of the 160-meter band is set with the core of inductor L_1. For example, if

Parts List—All-Band FET VFO

No.	Item No.	Description
1	C_1	20-pF variable capacitor
1	C_2	365-pF variable capacitor
1	C_3	see chart
1	C_4	see chart
1	C_5	see chart
1	C_6	56-pF silver-mica capacitor
2	C_7, C_8	0.05-μF capacitors
1	C_9	0.005-μF capacitor
1	C_{10}	330-pF capacitor
1	L_1	16.2–26.4 μH (J.W. Miller 21A225RB1)
1	L_2	5.08–8.16 μH (J.W. Miller 21A686RB1)
1	L_3	1.08–1.8 μH (J.W. Miller 21A156RB1)
1	L_4	0.885–1.2 μH (J.W. Miller 21A106RB1)
1	L_5	0.238–0.396 μH (J.W. Miller 20A337RB1)
1	Q_1	U183 or HEP-801 transistor
1	Q_2	HEP-802 transistor
1	RFC	2.5-mH radio-frequency choke
1	R_1	22K ½-watt resistor
1	R_2	180-ohm ½-watt resistor
1	R_3	68K ½-watt resistor
1	R_4	150-ohm ½-watt resistor
1	R_5	1K ½-watt resistor
18		Binding posts
2		Transistor sockets

you wish to tune between 1800 and 1850 kHz, set capacitor C_2 to midposition and adjust the frequency of the vfo to 1825 kHz using the slug of inductor L_1.

On 80 meters, capacitor C_2 tunes over a frequency range of about 150 kHz. Again the desired 150-kHz segment is located by setting the slug in inductor L_2.

On 40 meters, capacitor C_2 tunes over about 150 kHz as set by the slug of 40-meter coil L_3. Capacitor C_1 can then be used for bandspreading over a particular narrow segment of the band.

On 20 meters, capacitor C_1 is used for tuning, while capacitor C_2 is used for bandsetting. Capacitor C_1 tunes over approximately 100 kHz.

On the 10- and 15-meter bands capacitor C_1 is used alone for tuning purposes, while bandsetting is determined by the slug position in inductor L_5 and capacitor C_2. Inductor L_5 is used for both the 10- and 15-meter bands.

To operate crystal controlled one need only insert the crystal between binding posts 1 and 7. The small capacitor C_2 can then be used to shift the crystal frequency slightly. Insert a 68-pF capacitor between binding posts 1 and 2 (C_4 position). Other capacitors and coils must be out of the circuit.

The electrical stability of the vfo is comparable to commercial equipment. Mechanical stability is, of course, a function of the quality of the variable capacitors, shielding, and mounting rigidity. The vfo can be pegboard mounted, however, and be made mechanically stable. Shields can be fashioned to fit over the entire vfo. Insulated couplings should be attached to the shafts of the two variable capacitors. The unit serves as an excellent source of signal for QRP operations. It can drive succeeding amplifiers on any band without resorting to the complexity of a transmitter with multiplier stages.

Component Chart All-Band VFO

BAND	COIL	VARIABLE	C_3	C_4	C_5
160	L_1	C_1	950 pF	680 pF	1500 pF
80	L_2	C_1	560 pF	680 pF	1500 pF
40	L_3	C_1-C_2	390 pF	680 pF	950 pF
20	L_4	C_1-C_2	390 pF	150 pF	180 pF
15	L_5	C_2	390 pF	180 pF	150 pF
10	L_5	C_2	390 pF	56 pF	68 pF

Section 4

Multistage Transmitters

Project 19. One-Half Watt 10-160 CW-AM Transmitter

The MOPA transmitter of Fig. 4-1 has a single resonant circuit. A transistor miniature audio amplifier is its a-m modulator. All-band capability is possible with the home-constructed coils of Project 3.

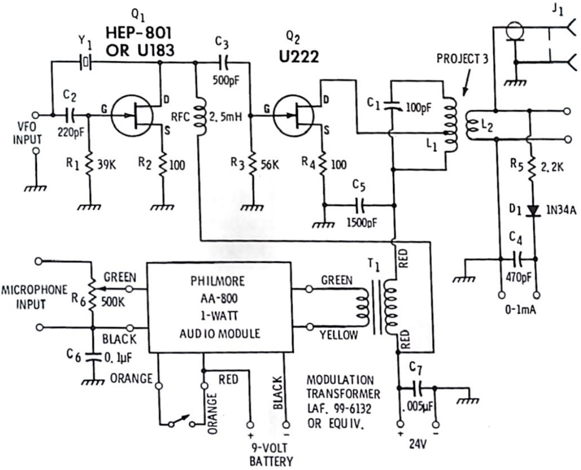

Fig. 4-1. Half-watt 10–160 cw/a-m transmitter.

The rf section consists of a U183 or HEP-801 Pierce crystal oscillator and a U222 FET power amplifier. The efficiency of the resonant output circuit is improved by connecting the drain of the output power transistor to a low-impedance point of the coil.

Low-cost miniature audio amplifier modules are readily available. Their output circuits are designed to match a low-impedance speaker. However, they can be used for a modulator by inserting an appropriate impedance step-up transformer between the low-impedance output of the audio amplifier and the higher-impedance input of the modulated stage.

The arrangement shown in Fig. 4-1 uses the type of output transformer normally employed in citizens band solid-state transceivers. Such transformers are available from the mail-order catalogs. Usually they include a center-tapped primary

Parts List—½-Watt 10-160 CW-A-M Transmitter

No.	Item No.	Description
1	C_1	100-pF variable capacitor
1	C_2	220-pF capacitor
1	C_3	500-pF capacitor
1	C_4	470-pF capacitor
1	C_5	1500-pF capacitor
1	C_6	0.1-μF capacitor
1	C_7	0.001-μF capacitor
1	D_1	IN34A diode
1	J_1	Coaxial receptacle (SO-239)
1	L_1, L_2	(See coil data, Project 3)
1	Q_1	HEP-801 or U183 FET
2	Q_2	U222 FET
1	R_1	39K ½-watt resistor
1	R_2	100-ohm ½-watt resistor
1	R_3	56K ½-watt resistor
1	R_4	100-ohm ½-watt resistor
1	R_5	2.2K ½-watt resistor
1	R_6	500K potentiometer
1	RFC	2.5-mH radio-frequency choke
1	T_1	Modulation transformer, Pri. 8-ohms, Sec. 1000-ohms (Lafayette 99-6132 or equiv.)
1		Crystal socket
1		Philmore 1-watt audio module, Model AA-800
2		Transistor sockets

and both a low- and a high-impedance secondary winding. For application as a modulation transformer connect the transformer as an impedance step up. That is, the low-impedance speaker secondary of the transformer is connected to the low-impedance output of the miniature and audio amplifier. The high-impedance primary is then connected across the modulation input terminals of the transmitter.

The input resistance of the modulated rf amplifier approximates 1000 ohms and a suitable match can be established. The audio amplifier has adequate output to compensate for some mismatch and any losses which result from the use of a second transformer. Only ¼ watt of audio is needed to modulate the ½ watt input to the modulated amplifier. The amplifier used was a Philmore AA-800 which has a rated power output of 1 watt. Full modulation is possible on all bands. In fact, with the sample model full modulation was possible with the volume control never set higher than three-quarters range. Refer to Projects 1, 2, 3, 8, 10, and 11.

Project 20. VFO-Controlled One-Half Watt CW-A-M Transmitter

The transmitter of Project 19 can be combined with the variable-frequency oscillator of Project 14 to build up a transmitter that will operate crystal-controlled on all bands 10 through 160 meters and vfo-controlled on bands 20 through 160 meters.

Note that the transmitter of Project 19 has a vfo input. For vfo operation one need only remove the crystal from the crystal socket. This completely breaks the crystal oscillator circuit. The vfo output can then be applied to the transmitter to act as its frequency-control source (Fig. 4-2).

Best operating conditions are established with the use of a separate battery for the vfo. Twelve volts are required. The transmitter can then be operated at the maximum of 36 volts

Fig. 4-2. Vfo control of FET transmitter.

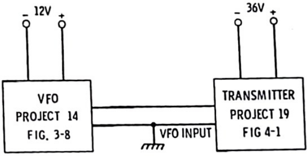

to obtain a good rf output. A clean steady signal is put on the air and the isolation between the two units prevents frequency-modulating the oscillator. Refer to Projects 1, 2, 3, 14, and 19.

Project 21. 10-15-20 Rubber-Crystal Special

A simple and versatile QRP rig can be built around three inexpensive HEP-801 field-effect transistors. One transistor is used in a Pierce crystal oscillator while two in parallel function in the power-amplifier stage (Fig. 4-3). One of the problems involved with QRP work is QRM, especially when it builds up on your crystal-controlled frequency and you cannot move from under the bedlam. However, a variable capacitor that can be connected either in series or in parallel with the crystal does permit a limited frequency change and you can move on to a

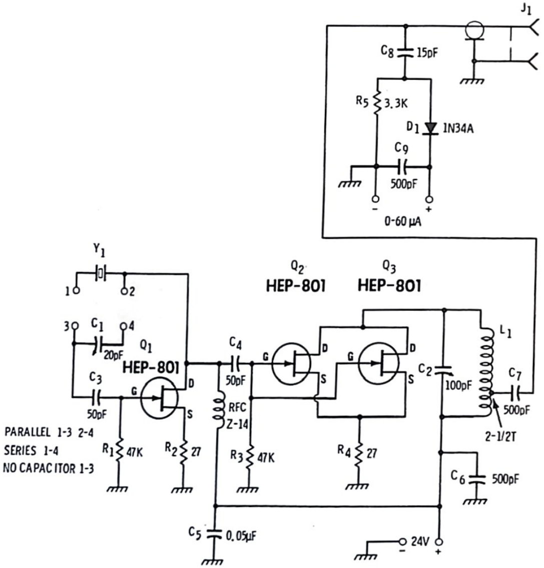

Fig. 4-3. 10-15-20 FET rubber-crystal special.

better spot. Using fundamental crystals on the 10-, 15- and 20-meter bands, it becomes relatively easy to move about 5 or 10 kHz, which can be a real help.

Frequency-change arrangement consists of crystal, variable capacitor, and four binding posts. The variable capacitor can be taken out of the circuit by connecting a jumper between terminals 1 and 3. To insert the capacitor in series with the crystal it is only necessary to connect a jumper between binding posts 1 and 4. At maximum capacitance you will find the operating frequency slightly higher than the marked crystal frequency. As you decrease the capacitance the operating frequency will continue to increase.

Parts List—Rubber-Crystal Special

No.	Item No.	Description
1	C_1	20-pF variable capacitor
1	C_2	100-pF variable capacitor
2	C_3, C_4	50-pF capacitors
1	C_5	0.05-μF capacitor
2	C_6, C_7	500-pF capacitors
1	C_8	15-pF capacitor
1	C_9	500-pF capacitor
1	D_1	1N34A diode
1	J_1	Coaxial receptacle
1	L_1	B & W 3013 or Air Dux 804T inductor
3	Q_1, Q_2, Q_3	HEP-801 transistors
1	R_1	47K ½-watt resistor
2	R_2, R_4	27-ohm ½-watt resistors
1	R_3	47K ½-watt resistor
1	R_5	3.3K ½-watt resistor
1	RFC	Radio-frequency choke (Ohmmite Z-14)
8		Binding posts
1		Crystal socket
3		Transistor sockets

You can go below the marked frequency of the crystal by connecting the variable capacitor in parallel with the crystal. This is done by connecting jumpers between binding posts 1 and 3 and between binding posts 2 and 4. Frequency will decrease as you increase the capacitance. Output also falls off with too much parallel capacitance. Refer to Projects 1, 2, 3, 4, and 10.

Project 22. Push-Pull RF Amplifier or Oscillator

The push-pull connection performs well as an oscillator or an amplifier. In the case of the field-effect transistor there is little difference in the wiring of a push-pull circuit for use as an oscillator or an amplifier. Such an arrangement is shown in Fig. 4-4. When the stage is to be used as an amplifier it is only necessary to remove the crystal from its socket. The drive signal from a preceding exciter can then be applied to binding posts 1 and 2. An added advantage of the push-pull connection is the fact that such a circuit de-emphasizes even harmonics.

The drain output circuit uses the plug-in coils detailed in Project 12. The balanced drive for its input circuit can be obtained from the low-impedance secondary of a preceding oscillator or driver. If the source of drive signal has a grounded secondary link, its ground should be removed and its two output terminals applied directly to input terminals 1 and 2 of the amplifier. A lead must also be run from common of the signal source and common of the amplifier.

The output is 1 watt or more on all bands 10 through 160 meters with 36 supply volts. Antenna matching is aided with

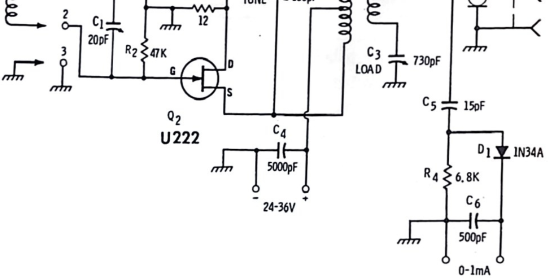

Fig. 4-4. Push-pull power amplifier or oscillator.

Parts List—Push-Pull Power Amplifier or Oscillator

No.	Item No.	Description
1	C_1	20-pF variable capacitor
1	C_2	100-pF variable capacitor
1	C_3	730-pF variable capacitor (two 365-pF ganged)
1	C_4	5000-pF capacitor
1	C_5	15-pF capacitor
1	C_6	500-pF capacitor
1	D_1	IN34A diode
1	J_1	Coaxial receptacle
1	L_1, L_2	Coil set as in Project 12
2	Q_1, Q_2	U-222 FET's
2	R_1, R_2	47K ½-watt resistors
1	R_3	12-ohm ½-watt resistor
1	R_4	6.8K ½-watt resistor
7		Binding posts
1		Crystal socket
1		Five-prong coil socket
2		Transistor sockets

the secondary load capacitor (C_3). Jockey between the *tune* and *load* capacitors until maximum output is obtained.

The amplifier can be driven by transmitters of Fig. 3-3 or Fig. 3-11, or the vfo pair of Figs. 3-8 and 3-9. Somewhat greater output can be obtained using the push-pull stage as an oscillator rather than an amplifier. However, as an amplifier it can be drain-modulated. The circuit arrangement permits you to select the desired mode of operation. Refer to Projects 1, 2, 3, 10, and 17.

Project 23. Utility Hybrid A-M Transmitter

The two-stage rf amplifier and audio module of Fig. 4-5 are unique in that the circuit arrangement permits the use of bipolar and field-effect transistors or a combination of both. It consists of a modified Pierce crystal oscillator with a resonant output circuit, followed by a push-pull connected output amplifier. The audio section consists of a two-watt output module and a modulation transformer that transforms the low-impedance output of the module to the dc input resistance of the modulated push-pull amplifier.

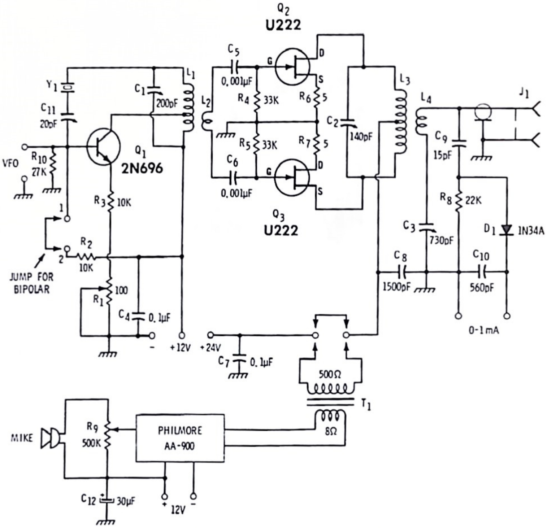

Fig. 4-5. Utility hybrid a-m transmitter.

Field-effect transistors function very well in the push-pull connection and permit the attainment of clean 100-percent modulation.

Using a 2N696 bipolar crystal oscillator and a pair of U222 FET's in the output stage, the dc input resistance to the modulated stage approximates 400 to 600 ohms. The dc input power is 2.5 to 3 watts and the output of the audio section is capable of producing 100-percent modulation. The interstage rf transformer uses the coils detailed in Project 3. The coils for the push-pull output stage are covered in Project 12.

The 100-ohm potentiometer in the emitter circuit of the input stage can be used to set the drive level to the output stage. In general it is set to a position that will result in maximum output as read by the meter connected to the output indicator. When using a bipolar crystal oscillator the jumper is connected between binding posts 1 and 2. Remove the jumper when using a FET.

C_2 and C_3 are jockeyed back and forth until maximum output is obtained. Modulator power is set by the gain control in the microphone input circuit.

It is possible to obtain 0.5 to 1.5 watts rf output using the U222's and a supply of 48 volts. When modulating, the supply voltage is reduced to 24 volts. Full modulation is then possible. Oscillator can be a U222 operating with a supply of 24 volts. Oscillator can be other bipolars such as 2N3053 or U183, HEP-801 FET's. Bipolar transistors 2N3053's or 2N3553's in the

Parts List—Utility A-M Transmitter

No.	Item No.	Description
1	C_1	200-pF variable capacitor
1	C_2	140-pF variable capacitor
1	C_3	730-pF variable capacitor (two 365-pF ganged)
1	C_4	0.1-μF capacitor
2	C_5, C_6	0.001-μF capacitors
1	C_7	0.1-μF capacitor
1	C_8	1500-pF capacitor
1	C_9	15-pF capacitor
1	C_{10}	560-pF capacitor
1	C_{11}	20-pF variable capacitor
1	C_{12}	30-pF capacitor
1	J_1	Coaxial receptacle
1	L_1, L_2	Coils (see Project 3)
1	L_3, L_4	Coils (see Project 12)
1	Q_1	2N696 bipolar transistor or others (see text)
2	Q_2, Q_3	U222 FET's or others (see text)
1	R_1	100-ohm potentiometer
1	R_2	10K ½-watt resistor
1	R_3	10-ohm ½-watt resistor
2	R_4, R_5	33K ½-watt resistors
2	R_6, R_7	5-ohm 5-watt resistors
1	R_8	22K ½-watt resistor
1	R_9	500K potentiometer
1	R_{10}	27K ½-watt resistor
1	T_1	500-ohm to 8-ohm transformer (Lafayette 99-6132 or equiv.)
15		Binding posts
1		Crystal socket
1		Philmore AA900 audio module
3		Transistor sockets

amplifier provide good output. The 2N3553's provide the greater output on 10 and 15. Even PNP types such as HEP-51 or 2N1132 can be used if supply voltage is reversed.

Clip-over heat sinks are required. The special tuned circuits described in Project 24 are recommended for obtaining a minimum of 1 to 2 watts output.

A vfo can be used to drive the input stage. Remove the crystal and connect the vfo to the input binding posts. The vfo of Projects 14 and 15 performs very well supplying drive on 160, 80, 40, and 20 meters.

The utility transmitter is versatile and will permit you to try many transistor combinations. Refer to Projects 1, 2, 3, 22, and 24.

Project 24. High-Q Bifilar Coupling and Toroid Coils

Power-type bipolar transistors have very low input and output resistances. The output resistance of power-type field-effect transistors is also low. Associated radio-frequency tuned circuits must be planned carefully if the amplifier stage is to operate efficiently and deliver maximum rf power to the load. Obtaining high resonant *Q*'s and proper matching are specific problems. The *Q* must be sufficient to obtain good efficiency, and low-impedance matching is essential in the transfer of maximum power.

Excellent performance can be obtained using plug-in coils which are a combination of conventional and bifilar construction (see coil table). Such coils can be wound on five-prong forms as per Projects 3 and 12. The primary winding is tapped at a low-impedance point for connecting to the low-impedance collector or drain output of the device. Regular close winding is used between the tap and the top of the coil. However, the secondary coil is bifilar-wound between the turns of the primary between the tap and common. Coil data is given in the accompanying chart for all bands 10 through 160 meters. This type of winding gives you a very tight low-impedance to low-impedance coupling at the same time the resonant circuit retains an acceptable and good *Q*.

Toroid coils are popular in solid-state equipment. Such a toroid ring core has a closed magnetic loop which ensures good coupling between primary and secondary windings. A few

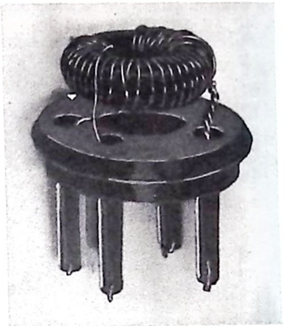

Fig. 4-6. Toroid-core transformer mounted on five-prong plug (40-meter coil).

turns of wire result in a coil of high inductance and, therefore, fewer turns are needed to obtain a given resonant frequency when using a given amount of tuned-circuit capacitance. A very small and compact resonant transformer is then possible, making the toroid coil especially attractive for compact solid-state rf stages. Toroid coil data is given in the coil table.

The primary is tapped again to obtain a low impedance connection point for the collector or drain of the device. The secondary is bifilar wound between turns of the lower section of primary and matches the low-impedance antenna or input of the succeeding stage. Toroid cores are available at low cost from a number of sources. Sources of cores, transistors, and other special components are listed in Appendix I.

If you are a confirmed experimenter, wire five binding posts into the circuit for band changing and experimentation with cores and windings. In our own experiments the toroidal core and winding were cemented to the top of a five-prong CP plug (Fig. 4-6). Thus toroids and conventional coil constructions could be used interchangeably.

A bifilar coupled or toroidal rf transformer used in the interstage circuit of the transmitter of Fig. 4-5 resulted in a conservative 35- to 50-percent increase in power delivered to the load. The increase was more marked with the use of bipolar transistors because their input resistance is lower in comparison to a field-effect transistor of the same rating. A significant increase in power output can be expected when using this type of coil construction for the transmitters covered in Projects 3, 8, 10, 16, 17, 19, 21, and 23.

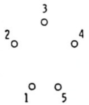

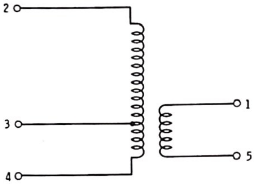

Regular

BAND	PRI.	TAP	SEC.	WIRE SIZE
160	65 turns	20 turns	20 turns	No. 26 enam.
80	40 turns	13 turns	13 turns	No. 24 enam.
40	21 turns	7 turns	7 turns	No. 22 enam.
20	11 turns	4 turns	4 turns	No. 22 enam.
15	8 turns	3 turns	3 turns	No. 20 enam.
10	5 turns	2 turns	2 turns	No. 20 enam.

Toroid

BAND	MFG. TYPE	PRI.	TAP	SEC.	WIRE SIZE
160	Permacor 13/16" 57-1541	68 turns	20 turns	20 turns	No. 26 enam.
80	Permacor 13/16" 57-1541	52 turns	15 turns	15 turns	No. 24 enam.
40	Amitron 0.68" E	40 turns	12 turns	12 turns	No. 24 enam.
20	Micrometals T-50-2	30 turns	9 turns	9 turns	No. 24 enam.
15	Amitron 0.5" SF	14 turns	4 turns	4 turns	No. 24 enam.
10	Amitron 0.5" SF	9 turns	3 turns	3 turns	No. 24 enam.

Project 25. Ten-Watt A-M Transmitter for 40-80-160

An rf power amplifier and audio-amplifier/modulator combination is shown in Fig. 4-7. The audio section is the Amperex unit described in Project 34. A transistor universal output transformer (T_1) serves as the modulation transformer, matching the 8-ohm output of the audio module to the 30- to 40-ohm input of the modulated amplifier. The transformer has a 10-watt rating.

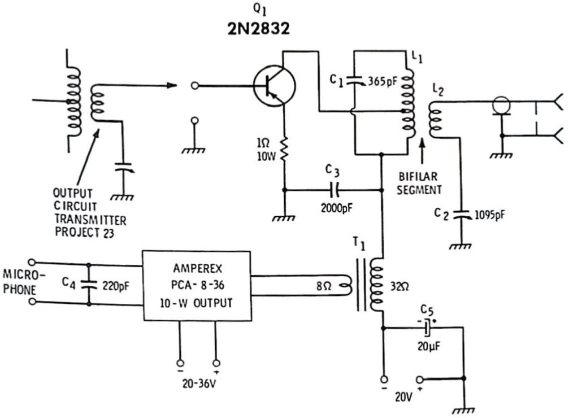

Fig. 4-7. Ten-watt amplifier and modulator.

The rf amplifier is a Motorola 2N2832 power transistor. Its cutoff frequency is such that it operates efficiently on the 40-, 80- and 160-meter bands. Use a power-transistor heat sink. Depending on frequency and drive signal, the dc input power falls somewhere between 10 and 15 watts—output power, 5 to 10 watts. Required rf input power is 1 to 2 watts. The transmitter of Project 23 supplies adequate drive. Other transmitters described in previous topics can also be used as a signal source provided they can deliver at least 1 watt to the input circuit of the 2N2832.

Parts List—10 Watt A-M Transmitter

No.	Item No.	Description
1	C_1	365-pF variable capacitor
1	C_2	1095-pF variable capacitor (three-gang 365-pF)
1	C_3	2000-pF capacitor
1	C_4	220-pF capacitor
1	C_5	20-μF capacitor
1	J_1	Coaxial receptacle
1	L_1, L_2	Bifilar coil set (Project 24)
1	Q_1	2N2832 transistor
1	R_1	10-watt 1-ohm resistor
1	T_I	8-ohms to 32-ohms (Lafayette TR-94)
8		Binding posts
1		5-prong coil socket
1		Heat sink (Astrodyne 2504)
1		10-watt audio module (Amperex PCA-8-36)
1		10-watt universal transistor output transformer

The 2N2832 is a PNP power transistor. The collector voltage must be obtained from a negative supply source. This same source can supply power to the amplifier/modulator. Make certain of the polarization of the supply voltage to the two segments.

It is possible to obtain almost 100-percent modulation using a microphone of high-impedance and a high-voltage output. A sensitive high-impedance dynamic type usually does a fine job. The 8-ohm secondary tap of the universal output transformer is connected to the 8-ohm output of the audio module. Either the 32-ohm or 48-ohm secondary tap, depending on supply voltage used, permits a high modulation level.

A bifilar collector tuned circuit provides efficient operation. Data on these coils is given in Project 24. Both the primary and the low-impedance secondary are tuned. The primary is parallel-tuned; the secondary, series-tuned.

The amplifier performs well on cw. For cw operation, power must be cut to the audio module and a jumper placed across the secondary of the modulation transformer. Refer to Projects 23 and 24.

Section 5

IC Circuits

Project 26. IC 100 kHz—25 kHz Calibrator

Integrated circuits have a number of applications in radio-communications equipment and in transmitter test gear. IC's can be used in the early speech amplifier and speech processing circuits of a transmitter. They can provide compactness and stability in the early low-power oscillator and rf stages also, and they are excellent low-level modulators particularly for single-sideband generation. A variety of low-cost units are suited to radio amateur QRP applications.

A simple integrated circuit consisting of 4 transistors and 6 resistors is shown in Fig. 5-1. The transistors are arranged in

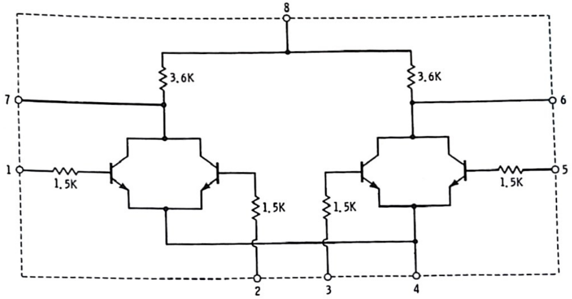

Fig. 5-1. HEP-580 integrated circuit.

pairs with separate base inputs but a common collector output. This configuration is ideal for the construction of oscillators and simple rf amplifiers.

It is a linear IC, and output can be made a good replica of the input wave. This permits its application as an audio amplifier too.

Some integrated circuits are designed specifically for a nonsinusoidal application. These are called digital IC's. Even these have applications in radiocommunications test equipment and specialized transmitter circuits. The typical digital IC may have a great many more built-in transistors and other components. A popular type is the so-called J-K flip flop. It is most often used as a two-to-one counter. That is, its pulse or square-wave output frequency is one half of the input frequency.

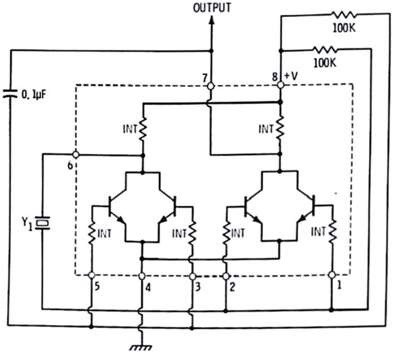

Fig. 5-2. IC crystal oscillator.

The crystal calibrator of Fig. 5-2 uses the HEP-580 linear IC as a crystal-controlled 100-kHz generator. Two follow-up J-K flip flops (Fig. 5-3) provide a frequency count of 4 to 1. Thus if the crystal oscillator is made to operate at 100 kHz, a 25-kHz output (100/4) can be taken off at the output of the second counter. A 50-kHz component is available at the output of the first counter.

The crystal oscillator, as shown in Fig. 5-3, employs only five external components in the form of two resistors, two capacitors, and the 100-kHz crystal. The two transistor pairs in association with these outside components operate as a two-stage feedback oscillator (Fig. 5-2) with the crystal inserted in the path between the common collector of one pair (terminal 6) and the base input of the other pair (terminals 1 and 2). A capacitor links the collector of one pair to the base inputs of the other pair. The 100-kHz output is derived at this collector (terminal 7) with the internal 3.6K resistor of the IC functioning as the collector load resistor.

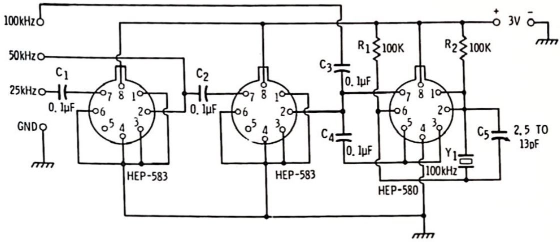

Fig. 5-3. IC counter circuit.

Most IC schematic diagrams do not show the internal components in this manner. However, if you wish to learn how a particular circuit functions you can obtain the complete schematic diagram of a particular IC and, in association with

Parts List—IC 100 kHz—25 kHz Calibrator

No.	Item No.	Description
4	C_1, C_2, C_3, C_4	0.1 μF capacitors
1	C_5	Calibrate WWV trimmer (2.5 to 13 pF)
2	R_1, R_2	100K ½-watt resistors
1	Y_1	100kHz Crystal
6		Binding posts
1		Crystal socket
1		HEP-580 IC
2		HEP-583 ICs
3		8-Pin IC sockets

the external component, determine how the circuit does function. In many cases basic operations are very similar to conventional transistor circuitry.

The diagram of the complete IC calibrator does not show the internal components but does detail the proper wiring of the IC's (Fig. 5-3). This diagram also shows the two flip flop counters that are driven by the output of the crystal oscillator. Note how very few external components are needed to build this simple and effective crystal calibrator. Only two capacitors in addition to the external components of the crystal oscillator are required. Four binding posts serve as output terminals with two additional binding posts needed for application of battery voltage. Refer to Project 5.

Project 27. IC Crystal Oscillator and Amplifier QRPP Rig

A single HEP-580 integrated circuit can be arranged in a crystal oscillator and amplifier combination. One transistor pair is operated as a Pierce crystal oscillator; the other, as a follow-up common-emitter rf amplifier. A single resonant circuit is used. This can be constructed from the plug-in coil data given in Project 3 or plug-in torodial coils detailed in Project 25.

Two schematic diagrams are given in Fig. 5-4, so you will understand how a knowledge of the internal components of an integrated circuit helps you to arrange the external components into a specific type of circuit.

Note that in the Pierce arrangement the crystal is connected between terminal 7 and terminals 1 and 2. This is the collector-to-base feedback path. The radio-frequency choke connects between terminal 7 and terminal 8. In so doing you shunt the choke across the internal collector resistor.

The external capacitor (C_3) couples the collector of the first transistor pair to the base terminals 3 and 5 of the second pair. R_2 is the base resistor. The resonant circuit is connected between terminal 6 and terminal 8. It is shunted across the internal collector resistor of the second pair. This internal resistor does not affect the *Q* of the resonant circuit adversely.

This little midget neighborhood transmitter operates well on all bands 10 through 160 meters. Optimum feedback can be set on a given channel with a variable capacitor in place of

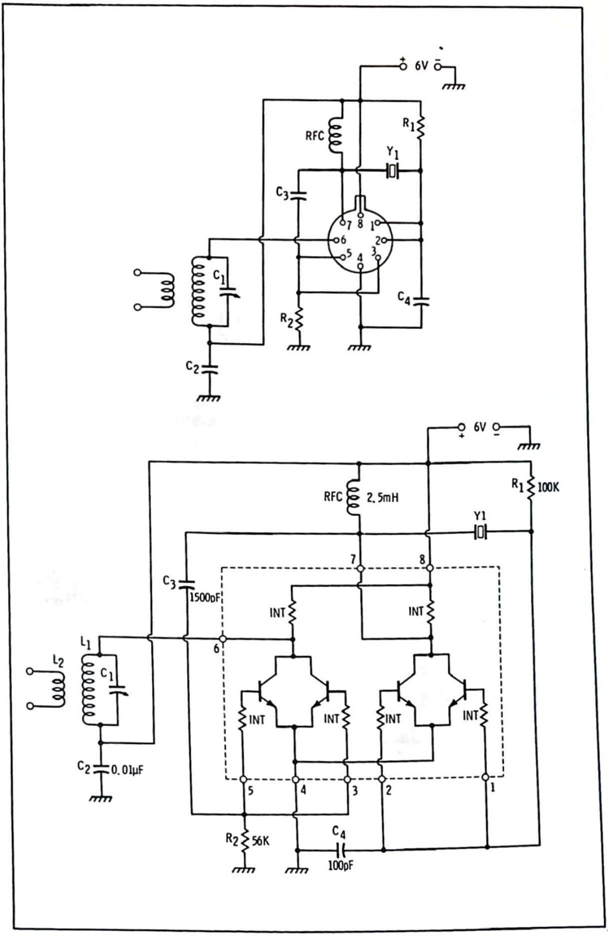

Fig. 5-4. IC MOPA circuit.

Parts List—IC Crystal Oscillator and Amplifier

No.	Item No.	Description
1	C_1	Variable capacitor 140 pF
1	C_2	0.01-μF capacitor
1	C_3	1500-pF capacitor
1	C_4	100-pF capacitor (Can be variable)
1	L_1, L_2	Coil set (Project 3)
1	R_1	100K ½-watt resistor
1	R_2	56K ½-watt resistor
1	RFC	2.5-mH RFC choke
5		Binding posts
1		Crystal socket
1		8-pin IC socket
1		5-Prong coil socket
1		HEP-580 IC

capacitor C_4 in the base circuit of the first transistor pair. On 10, 15, and 20 meters little or no capacitance is required. However, maximum capacitance is needed to support oscillation on 160 meters. The dc input power to the amplifier is 40 to 50 milliwatts. Refer to Projects 1, 2, 3, 4, 13, and 26.

Project 28. 100 Milliwatt IC Transmitter

Two HEP-580 integrated circuits can be combined to obtain a dc input power to the final stage of more than 100 milliwatts.

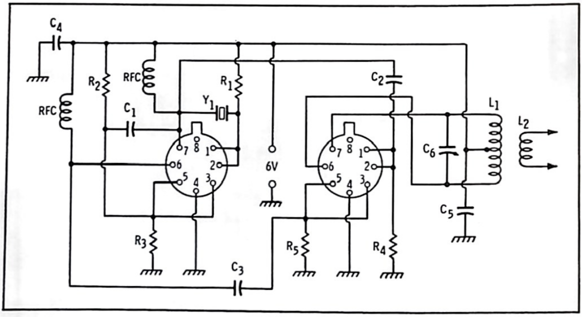

Fig. 5-5. 100-mW

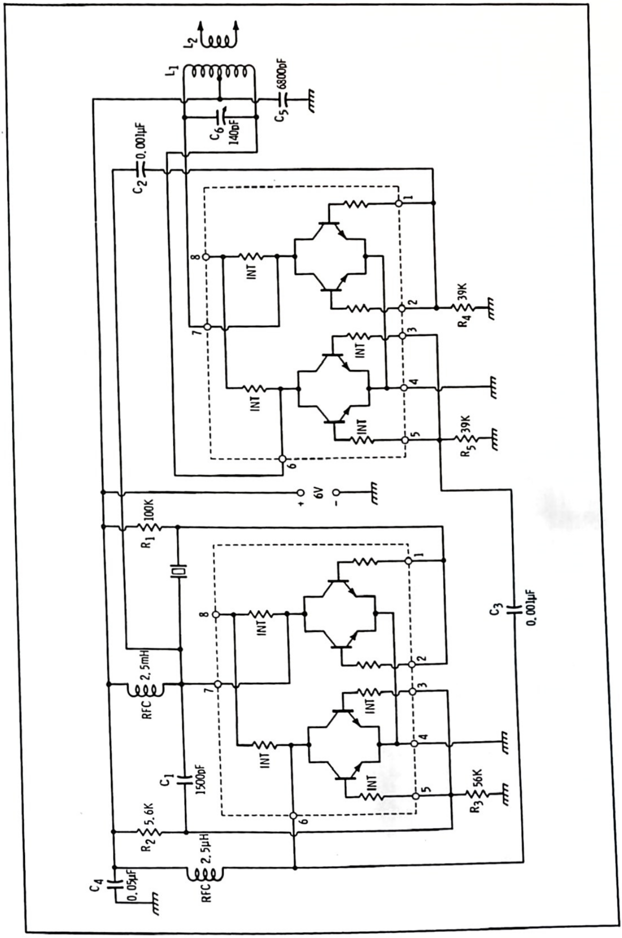

IC transmitter.

Parts List—100-mW IC Transmitter

No.	Item No.	Description
1	C_1	1500-pF capacitor
1	C_2	0.001-μF capacitor
2	C_3, C_4	0.001-μF capacitors
1	C_5	6800-pF capacitor
1	C_6	Variable capacitor, 140 pF
1	L_1, L_2	Coil set (Project 12)
1	R_1	100K ½-watt resistor
1	R_2	5.6K ½-watt resistor
1	R_3	56K ½-watt resistor
2	R_4, R_5	39K ½-watt resistor
2	RFC	2.5 mH radio-frequency chokes
5		Binding posts
1		Crystal socket
2		8-Pin IC socket
1		5-prong coil socket
2		HEP-580 IC's

One integrated circuit is connected as a crystal oscillator and phase inverter. In so doing, equal-amplitude and opposite-polarity rf drive is made available, Fig. 5-5. The second integrated circuit acts as a push-pull power amplifier. Coil data is given in Projects 12 and 25.

The dc input to the push-pull stage, using a 6-volt lantern battery, is approximately 20 to 30 milliamperes (dc input power of 120 milliwatts or higher). This is the current drawn when supplying rf output to a 50-ohm load. Output signal is clean and the IC transmitter can be keyed in the negative supply voltage line. Refer to Projects 1, 2, 3, 12, 25, and 26.

Project 29. IC Variable-Frequency Oscillator

The HEP-580 integrated circuit can be used as a variable-frequency oscillator and buffer combination. A Seiler type oscillator is employed as shown in Fig. 5-6. In the integrated circuit all four emitters are tied together. A 1000-ohm emitter resistor is used, serving as the output load for the oscillator and the input resistor of the second pair of transistors, which are connected in a common-base amplifier. The collector output is coupled to a succeeding amplifier.

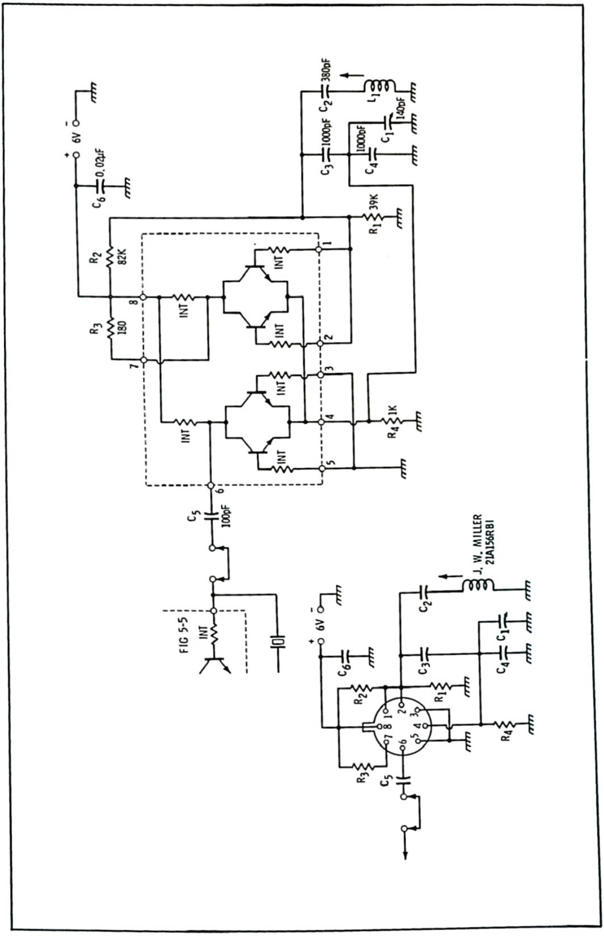

Fig. 5-6. Vfo and buffer.

Parts List—IC VFO

No.	Item No.	Description
1	C_1	140-pF variable capacitor
1	C_2	380-pF silver-mica or polystyrene-film capacitor (50 and 330 pF in parallel)
1	C_3	1000-pF capacitor
1	C_4	1000-pF capacitor
1	C_5	100-pF disc capacitor
1	C_6	0.02-μF disc capacitor
1	L_1	1.08–1.8 μH coil (J.W. Miller 21A156RB1)
1	R_1	39K ½-watt resistor
1	R_2	82K ½-watt resistor
1	R_3	180-ohm ½-watt resistor
1	R_4	1000-ohm ½-watt resistor
4		Binding posts
1		8-Pin IC socket
1		HEP-580 IC

The amplifier to which the vfo supplies rf voltage can be the crystal oscillator circuit of the preceding project. The crystal oscillator is used as an amplifier by removing the crystal from the crystal socket. A pair of binding posts can be installed and an appropriate jumper can be inserted to transfer signal to the input of the former crystal oscillator from the output of the vfo as shown in Fig. 5-6.

The vfo has a substantial frequency range using the slug of the inductor as well as the 140-pF variable capacitor for tuning the desired frequency band. Operation is possible on the entire 40-meter band as well as those frequency ranges that permit vfo operation on the 2- and 6-meter bands after appropriate frequency multiplication. For operation on these latter frequencies, lower the value of capacitor C_2.

Capacitor C_1 provides about a 75-kHz tuning range on 40 meters. The actual 75-kHz segment is set with the coil slug. Refer to Projects 1, 2, 3, 14, 18, 26, 27, and 28.

Section 6

Sideband Circuits

Project 30. IC Double Sideband Generator

QRP single-sideband and double-sideband operations have become more popular using solid-state devices and PEP input powers of 20 watts and less. Integrated circuits can be used in both double-sideband and single-sideband generators. An integrated circuit designed specifically for this manner of operation is the Motorola MC-1596G shown in Fig. 6-1. Fig. 6-1A is a schematic of the internal components while B is a practical suppressed-carrier double-sideband generator. A typical suppressed carrier waveform is depicted in C.

Internally there are dual differential amplifier pairs as shown at the top of the schematic. This is a doubly balanced arrangement with the carrier being applied to the bases. The internal connections are such that there is carrier cancellation in the output.

The modulating signal is introduced in the emitter circuits. Actually the modulating wave is applied to the bases of two transistors connected into the emitter circuits of the balanced modulators. The two bases are fed out-of-phase, and in the modulation process sideband frequencies develop across the output, while the carrier cancels. The lower pair of transistors provide stabilized bias, acting as a low-impedance current-bias source for the active transistors of the integrated circuit.

A practical circuit showing the arrangement of the external components is shown in Fig. 6-1B. Note that the carrier is developed between terminals 7 and 8, which are internally

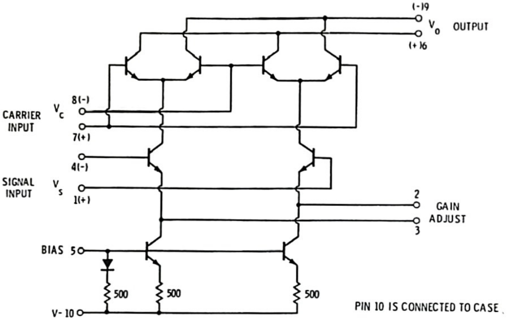

(A) Internal components of MC-1596G.

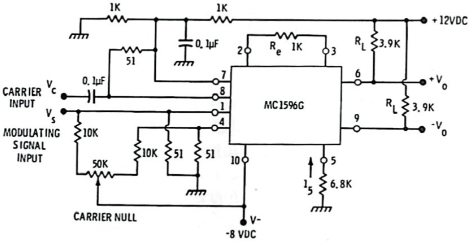

(B) Double-sideband suppressed-carrier generator.

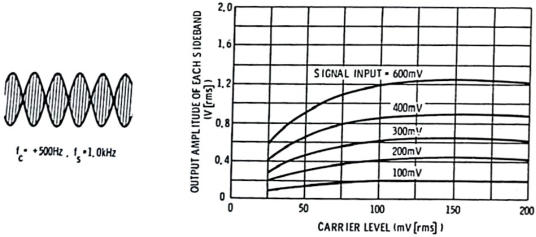

(C) Suppressed-carrier waveform.

(D) Sideband output level.

Fig. 6-1. Balanced modulator in an integrated circuit.

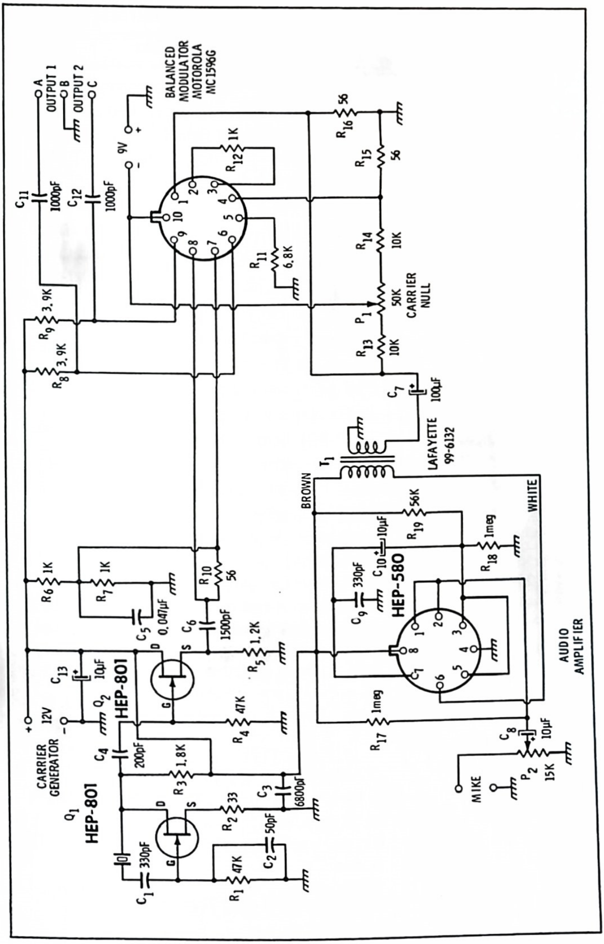

Fig. 6-2. Double-sideband generator.

Parts List—IC Double-Sideband Generator

No.	Item No.	Description
1	C_1	330-pF capacitor
1	C_2	50-pF capacitor
1	C_3	6800-pF capacitor
1	C_4	200-pF capacitor
1	C_5	0.047-μF capacitor
1	C_6	1500-pF capacitor
1	C_7	100-μF electrolytic capacitor
1	C_8	10-μF electrolytic capacitor
1	C_9	330-pF capacitor
1	C_{10}	10-μF electrolytic capacitor
2	C_{11}, C_{12}	1000-pF capacitors
1	C_{13}	10-μF electrolytic capacitor
1	P_1	50K potentiometer
1	P_2	15K potentiometer
2	Q_1, Q_2	HEP-801 field-effect transistors
2	R_1, R_4	47K ½-watt resistors
1	R_2	6.8K ½-watt resistor
1	R_3	1.8K ½-watt resistor
1	R_5	1.2K ½-watt resistor
2	R_6, R_7	1K ½-watt resistors
2	R_8, R_9	3.9K ½-watt resistors
1	R_{10}	10K ½-watt resistor
1	R_{11}	6.8K ½-watt resistor
1	R_{12}	1K ½-watt resistor
2	R_{13}, R_{14}	10K ½-watt resistors
2	R_{15}, R_{16}	56-ohm ½-watt resistors
2	R_{17}, R_{18}	1 meg ½-watt resistors
1	R_{19}	56K ½-watt resistors
1	T_1	Modulation Transformer Pri. 3000 Sec. 500 CT (Lafayette 99-6132)
1		Aluminum Minibox (3¼″ x 2⅛″ x 1⅝″)
9		Binding posts
1		Crystal socket
1		8-pin IC socket
1		HEP-580 IC
1		Motorola MC1596G IC
1		10-pin IC socket
2		Transistor sockets

connected to the balanced-modulator pairs. The input impedance is low and set by the 51-ohm resistor that is connected between terminals 7 and 8. The modulating signal is inserted between terminals 1 and 4. Again 51-ohm resistors serve as low-impedance inputs. A balanced output is developed between terminals 6 and 9, which connect to the collectors of the balanced-modulator pairs.

The 50K potentiometer is used to null the output carrier level. It does so by applying the proper relative dc bias to the emitters of the balanced modulators. The summation of the two sidebands with modulation by a single tone results in the double-frequency pattern shown in Fig. 6-1C.

A complete double-sideband generator is shown in Fig. 6-2. Two integrated circuits and a pair of field-effect transistors are employed. Two HEP-801's operate as crystal oscillator and isolating buffer, generating the carrier component for application to the balanced modulator. An IC HEP-580 is used as a two-stage speech amplifier. An input potentiometer permits you to regulate the strength of the applied audio. The modulator transformer used in previous projects serves as a good audio output transformer to transfer signal from the high-impedance output of the IC audio amplifier to the low-impedance input of the double-sideband balanced modulator. Audio is applied to terminal 1 of the IC balanced modulator.

Illustration 45D will give you some idea of the sideband output amplitude as related to carrier and modulating wave input signal level. For example, a modulating wave of 600 mV and a carrier level of 125 mV result in the generation of a 1.2-volt sideband. Normally the modulating wave is made four or more times greater in magnitude than the carrier amplitude to obtain a strong sideband output.

To minimize carrier feed-through, the FET oscillator-buffer is mounted in a small grounded aluminum case. Mount the case on the pegboard so a very short lead connects the output of the buffer to terminal 8 of the balanced modulator. Refer to Projects 4, 26, 27, 28, and 29.

Project 31. SSB-DSB Generator

The double-sideband generator of Project 30 can be expanded to include a sideband filter. With an appropriate jumper arrangement both double-sideband and single-sideband operation is then possible.

A crystal-type 9-MHz sideband filter is employed. Such a filter passes a 2.5-kHz segment of spectrum on the upper or lower side of 9 MHz, depending on the carrier frequency used. It offers a high rejection to the frequencies that comprise the opposite-side sideband spectrum. For upper-sideband operation the carrier crystal frequency must be 8998.5 kHz; lower-sideband, crystal frequency is 9001.5 kHz.

For proper operation of the sideband filter these crystals must be set on frequency precisely; therefore it is advisable to place a trimmer capacitor across the crystal in the circuit of Fig. 6-2. You can use a carefully calibrated communications receiver to adjust the trimmer. The frequency points are 1.5 kHz on either side of 9 MHz. The crystal calibrator of your receiver can be used to obtain a precise 9-MHz calibration. Precise setting of the crystal frequency is important in obtaining a satisfactory response for the desired sideband spectrum and maximum rejection of the undesired sideband spectrum.

As shown in Fig. 6-3, the output of the double-sideband generator is connected to the input of a two-stage bipolar circuit. This amplifier builds up the signal level for both double-sideband and single-sideband operation. For single-sideband operation the sideband filter can be placed between the two stages. Circuit components have been selected to obtain the proper

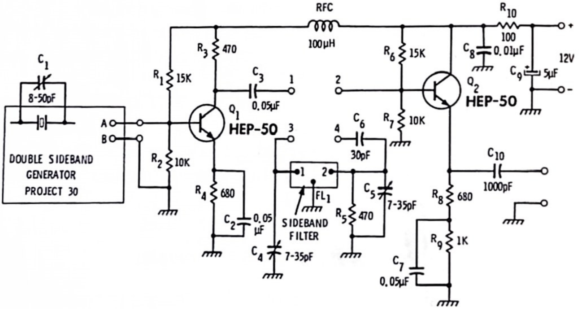

Fig. 6-3. Ssb/dsb generator.

input and output matching for the filter. The insertion loss for the desired sideband spectrum is less than 3 dB. Circuit components provide the proper match for the filter. Two trimmers are included for fine tuning. They are adjusted for minimum ripple on the sideband scope pattern.

It should be pointed out that for single-sideband operation the sideband filter requires that the crystal oscillator be operated on one or the other of the carrier crystal frequencies in the 9-MHz range. A later heterodyning circuit must then be employed to convert the 9-MHz sideband signal to the desired amateur band frequency.

Two alternatives are possible for double-sideband operation. One of the 9-MHz crystals can be employed and the same heterodyning process used to convert the double-sideband signal to the desired amateur transmit frequency. It is also possible to eliminate the heterodyning process completely by using

Parts List—SSB-DSB Generator

No.	Item No.	Description
1	C_1	8- to 50-pF trimmer capacitor
1	C_2, C_3	0.05-pF capacitor
2	C_4, C_5	7- to 35-pF capacitor
1	C_6	30-pF capacitor
1	C_7	0.05-μF capacitor
1	C_8	0.01-μF capacitor
1	C_9	5-μF electrolytic capacitor
1	C_{10}	1000-pF capacitor
1	FL_1	9-MHz sideband filter (Spectrum International SF-9A)
2	Q_1, Q_2	HEP-50 Transistors
1	R_1	15K ½-watt resistor
2	R_2, R_7	10K ½-watt resistors
2	R_3, R_5	470-ohm ½-watt resistors
1	R_4	680-ohm ½-watt resistor
1	R_6	15K ½-watt resistor
1	R_8	680-ohm ½-watt resistor
1	R_9	1000-ohm ½-watt resistor
1	R_{10}	100-ohm ½-watt resistor
1	RFC	100-μH radio-frequency choke
10		Binding posts
1		Generator of Project 30
2		Transistor sockets

a crystal of the desired transmit frequency in the crystal-oscillator circuit.

When double-sideband operation is desired, a jumper is connected between binding posts 1 and 2. For single-sideband operation, jumpers are connected between binding posts 1 and 3 and between binding posts 2 and 4. There is no jumper between 1 and 2. Refer to Project 30.

Project 32. Sideband Linear Amplifier

One additional stage will complete a QRPP sideband generator. A complete DSB transmitter would consist of the two field-effect transistors of the carrier oscillator; the two integrated circuits of the double sideband generator (Fig. 6-2); the two-stage bipolar transistor amplifier, with or without sideband filter (Fig. 6-3); and the power field-effect transistor amplifier of Fig. 6-4. A field-effect transistor is an ideal linear amplifier because of its high input impedance. The magnitude of the input signal must be such that the transistor is not driven into the gate-conduction region. This is accomplished by using external bias. The stage is biased toward cutoff so it operates class AB. Just enough bias is used to keep the peaks below gate conduction. In so doing maximum gain is obtained.

Double-sideband transmission is attractive because no heterodyning process is required; one need only change the frequency of the carrier oscillator. Six-band operation is possible

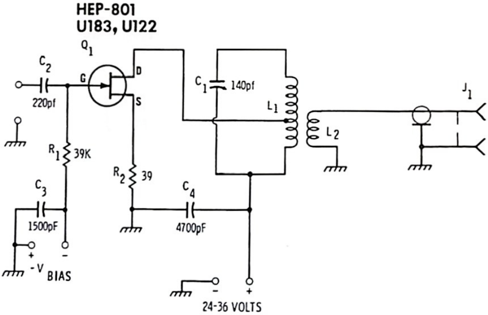

Fig. 6-4. Linear amplifier for sideband generator.

Parts List—Linear Amplifier

No.	Item No.	Description
1	C_1	140-pF variable capacitor
1	C_2	220-pF capacitor
1	C_3	1500-pF capacitor
1	C_4	4700-pF capacitor
1	J_1	Coaxial receptacle
1	L_1, L_2	Coil set (Project 24)
1	Q_1	U183, HEP-801, U222 FET
1	R_1	39K ½-watt resistor
1	R_2	39-ohm ½-watt resistor
6		Binding posts
1		Five-prong coil socket
1		Transistor socket

using the coils of Project 24 and appropriate crystals. Biasing of −3 volts for the HEP-801 and −4.5 volts for the U222 is proper for the level of signal voltage made available at the output of the ssb-dsb generator. A 9-MHz single-sideband output can be obtained for driving a follow-up heterodyning unit. Refer to Projects 24, 30, and 31.

Project 33. Utility RF Amplifier and Oscillator

The push-pull circuit of Fig. 6-5 can be employed as an rf power oscillator, class-C rf amplifier or linear rf power amplifier. As a linear amplifier it can build up the level of a double-sideband, single-sideband, or amplitude-modulated signal. For low-power operation, two HEP-801 FET transistors can be used. For power output levels of up to 1 watt or more the U222 FET's do well.

An external 9-volt bias battery is employed. For power oscillator or class-C amplifier operation no external bias is employed. It is a fine QRPP cw crystal-controlled oscillator-transmitter. Driven by a vfo it can be used as a tunable-frequency cw transmitter. Just remove the crystal from its socket when the circuit is to be used as an amplifier.

For operation as a linear amplifier it is necessary to bias the gates in the direction of cutoff. When the input signal is of high magnitude (7-volt peaks) the stage must be biased to near cutoff value of −7 volts. Somewhat less bias can be employed

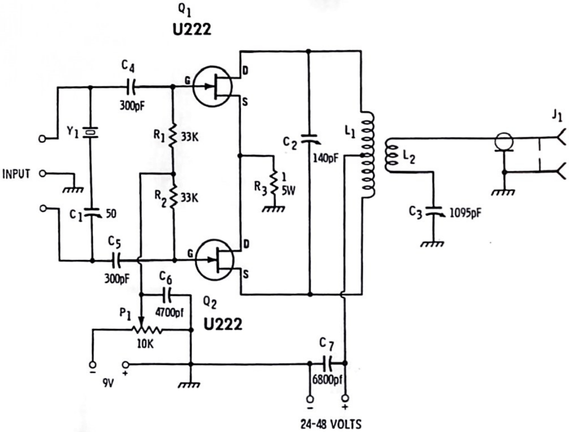

Fig. 6-5. Utility FET amplifier and power oscillator.

Parts List—Power Oscillator and Amplifier

No.	Item No.	Description
1	C_1	50-pF variable capacitor
1	C_2	140-pF variable capacitor
1	C_3	1095-pF variable capacitor
2	C_4, C_5	300-pF capacitors
1	C_6	4700-pF capacitor
1	C_7	6800-pF capacitor
1	L_1, L_2	Coil set as per chart
1	P_1	10K Potentiometer
2	Q_1, Q_2	U222 FET's
2	R_1, R_2	33K ½-watt resistors
1	R_3	1-ohm 5-watt resistor
7		Binding posts
1		Crystal socket
2		Transistor sockets

when the magnitude of the input signal is of lower amplitude. Biasing away from cutoff permits you to obtain a higher power output without encountering distortion. For linear operation, of course, the signal must not be high enough to cause gate current. Data for push-pull coils is given in the chart. They ensure proper matching and loading of power FET's. Refer to Projects 30, 31, and 32.

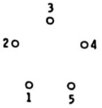

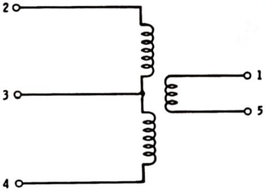

BAND	PRI	SEC	WIRE SIZE
160	65 turns	20 turns	No. 26 enam.
80	40 turns	13 turns	No. 24 enam.
40	21 turns	7 turns	No. 22 enam.
20	11 turns	4 turns	No. 22 enam.
15	8 turns	3 turns	No. 20 enam.
10	5 turns	2 turns	No. 20 enam.

Section 7

Commercial Modules

Project 34. Audio Modules

A variety of inexpensive audio modules can be purchased from the mail-order houses. Power output levels extend between several hundred milliwatts and 15 or 25 watts. There is no problem in finding units which fit your specific needs. They can be used as an a-m modulator for QRP transmitters as well as speech amplifiers for sideband transmitters.

Output levels of several watts are useful for QRP work and provide adequate modulation level for dc input power to the modulated amplifier of 5 to 7 watts. A little extra power is helpful when inserting an additional modulation transformer between the output of the audio module and the modulation input of the QRP transmitter.

The schematic diagram of a 2-watt unit (Lafayette 99-91324 and Philmore AA 900) is given in Fig. 7-1. It consists of an input voltage amplifier, driver stage and class-B push-pull output. Output impedance can be either 8 or 16 ohms. The dc power can be derived from the popular 9-volt transistor radio battery. Ten millivolts of microphone signal will produce 2 watts of output. The resting no-signal current drawn by the module is 12 milliamperes. On audio peaks the current demand rises to 500 milliamperes.

Higher-powered audio modules are also available such as the 20-watt Amperex PC-8-36 in Fig. 7-2. It consists of a two-transistor input circuit followed by a pair of complementary drivers and class-B push-pull output transistors. It is a trans-

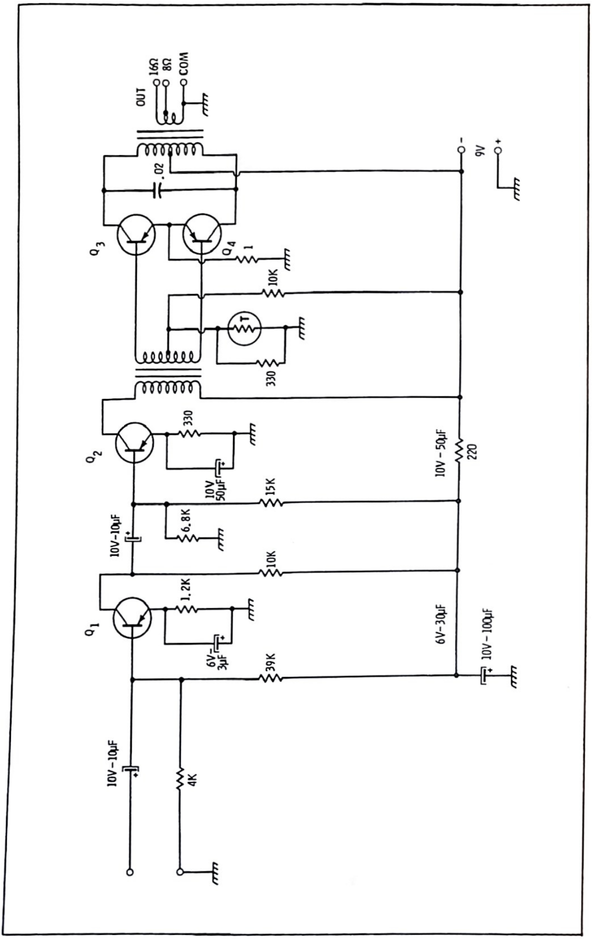

Fig. 7-1. Two-watt output module.

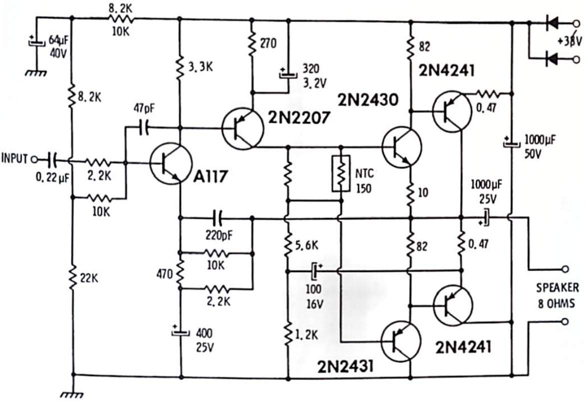

Fig. 7-2. Twenty-watt audio module.

formerless output stage with an output impedance of 8 ohms. This makes it convenient to use a high-power transistor output transformer as a modulation transformer. The 8-ohm secondary of such a transformer is connected to the audio module output, while the transformer primary connects to the modulation input of a higher-powered solid-state QRP transmitter. A universal transistor output transformer provides a variety of match possibilities. Refer to Projects 19 and 20.

Project 35. Ten-Tec 40-80 Module

The Ten-Tec TX-1 is a transmitter module consisting of a crystal oscillator and an rf power amplifier (Fig. 7-3). The dc power input is 2 watts; output impedance is 50 to 75 ohms.

The transmitter can be operated on bands 15 through 80 meters. Appropriate coil taps must be used (Fig. 7-4). Connecting terminals E to D and C to B provides coverage of 40 and 80 meters. Coverage on 15 and 10 meters requires that E be connected to L and C to A. Trimmer-type capacitors are connected across the tuned circuits. However, if desired, external variable capacitors can be employed by connecting them between common and the desired coil taps. When using a 12-

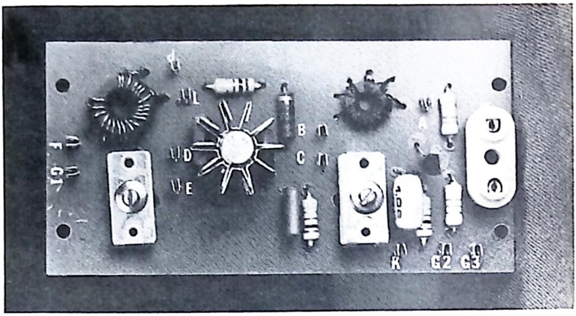

Fig. 7-3. TEN-TEC transmitter module.

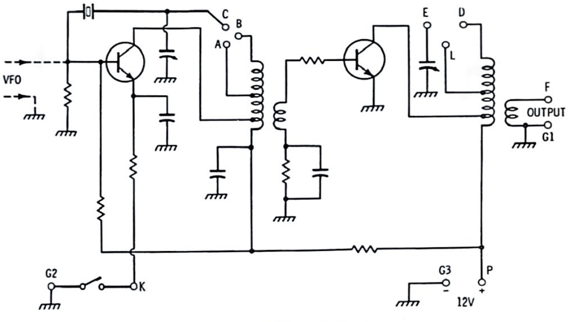

Fig. 7-4. TEN-TEC TX1 circuit.

volt battery, the dc current will be approximately 250 milliamperes when driving a proper load.

The transmitter is keyed in the emitter circuit of the crystal oscillator. The closing of the key between terminals K and G2 closes the emitter circuit to common. The battery is connected between terminals P and G3.

For ease in operation the module can be fastened to a pegboard and binding posts connected to the various terminals. For QRP operation this permits ease in band changing. Other modules can be mounted on the same pegboard if you wish to add on to the QRP transmitter.

Project 36. Ten-Tec VFO

Ten-Tec also sells a built-up vfo module (Fig. 7-5). It can be used as a frequency source for almost any type of QRP transmitter. It can also be employed as the vfo for the *Ten-Tec* transmitter of Project 35. The combination then functions as a vfo transmitter rather than crystal-controlled.

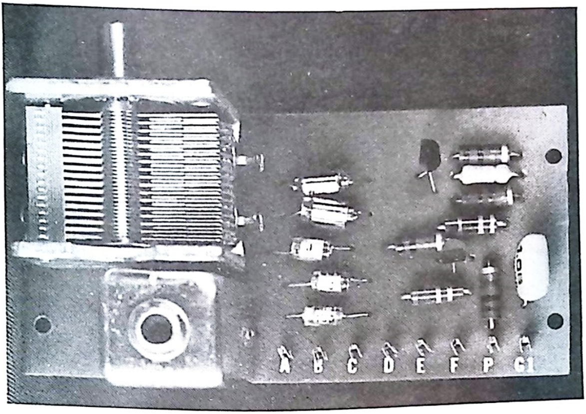

Fig. 7-5. TEN-TEC vfo module.

The module consists of a stabilized variable-frequency oscillator and an emitter-follower output circuit (Fig. 7-6). Approximately 2 volts rms is developed across the output. Inductor L_3 and capacitor C_3 tune the resonant circuit. For 80-meter operation, terminal A is connected to C, and the tuning capacitor is connected to terminal D. For 40-meter operation terminal B is connected to C and the tuning capacitor to E. Supply voltage is again 12 volts; the unit draws only 15 milliamperes.

If the unit is to be used as the basic signal source for a variable-frequency QRP transmitter it can also be mounted conveniently on a pegboard with the various terminals brought

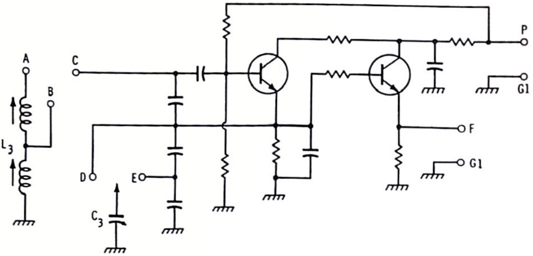

Fig. 7-6. TEN-TEC vfo circuit.

out to binding posts. This will give you greater ease in changing frequency. A shield can also be fashioned for the module and fastened down to the pegboard. As mentioned, the oscillator can be employed as a variable-frequency source for the QRP transmitter of Project 35. A 220-pF coupling capacitor can link the output of the vfo to the base of the transmitter input transistor. This point can be reached at the crystal socket (or a binding post can be connected to this point). The crystal is removed for vfo operation. A common (ground) line must be run between the two modules. This can be the negative side of a common 12-volt battery.

Project 37. Modulator for Ten-Tec Transmitter

A QRP a-m transmitter can be built up by using an audio module in conjunction with the vfo and transmitter of Projects 33 and 34 (Fig. 7-7). It will provide operation on 20, 40, and 80 meters, vfo controlled, and on 15 and 80 meters with crystal control.

As shown in the photograph and in the schematic (Fig. 7-8) the terminals have been brought out to binding posts to permit ease in band-changing and tuning. When vfo operation is desired there must be no crystal in the crystal socket. The vfo output connects between base and common of the input stage of the amplifier by way of a 220-pF dc-isolation capacitor.

When operating on 80 meters, the three resonant circuits, (oscillator, input amplifier, and output amplifier) are all tuned on this band. The same applies for 40-meter operation. How-

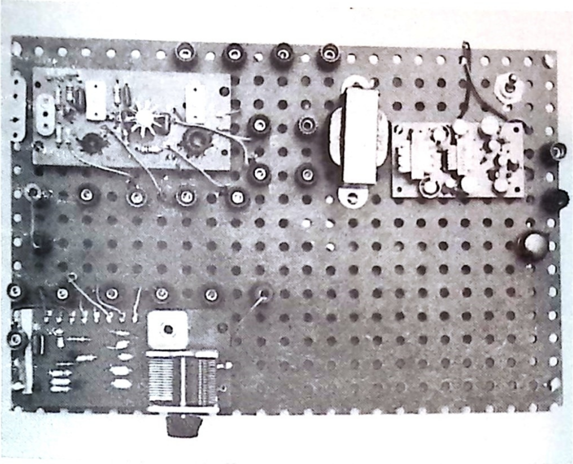

Fig. 7-7. TEN-TEC units mounted on pegboard with audio module. Jumpers are used to change bands.

ever, for 20-meter operation, only the oscillator is tuned to 40 meters. The resonant circuits of the amplifier are tuned to 20 meters, with the input stage acting as a frequency doubler. For crystal-controlled operation, the vfo is disconnected, and the proper crystal must be inserted in the crystal socket.

When properly loaded and operating with a 12-volt battery, the dc input to the modulated amplifier is 2 to 3 watts. The input resistance to the modulated stage approximates 48 ohms (12/0.25). A number of transistor power output transformers have been designed to match 48 ohms to an 8-ohm speaker. Such a transformer connected in reverse fashion to the 8-ohm output of an audio module would supply an ideal match to the input of the modulated power amplifier.

The arrangement of Fig. 7-8 uses a 3.2- to 48-ohm transformer. Only one-half of the output winding is active. A good modulation characteristic results, especially with crystal control. There is some fm-ing when using the vfo. It can be reduced by decreasing the value of C_1 with some sacrifice in output.

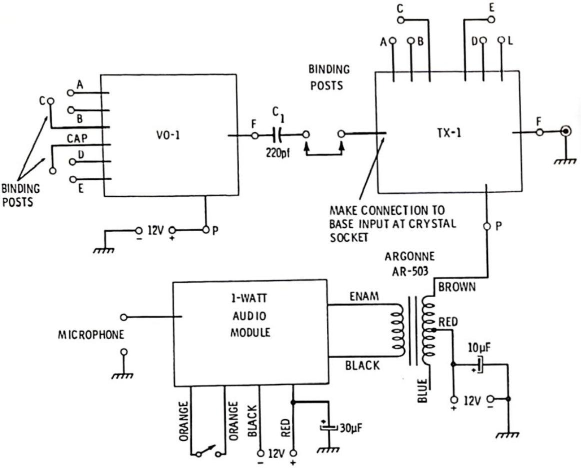

Fig. 7-8. Modulator for TEN-TEC modules.

Project 38. ICM Crystal Oscillators

The International Crystal Manufacturing Company makes available a small crystal oscillator module that is convenient for QRP work (Fig. 7-9). Printed circuit board and parts are supplied in kit form. The schematic diagram is shown in Fig. 7-10.

A high- and low-frequency version of the oscillator is available. Schematically they are the same, but tuning coils and capacitors differ according to frequency range. The low-frequency kit is for the 3- to 20-MHz range; the high-frequency kit, from 20-MHz to 60-MHz.

Output into 50 ohms is about one milliwatt. Oscillators will operate over a wide span of frequencies without any tuning adjustment. However, the output can be peaked on a specific frequency range using the inductor slug if it is a part of the coil assembly of that range.

To obtain a low-impedance output, the coil of the collector resonant circuit is tapped. This permits a match to a 50-ohm

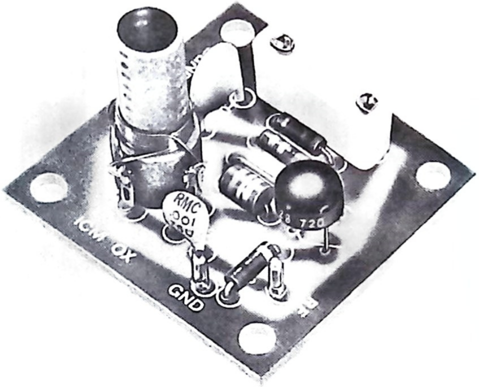

Fig. 7-9. International Crystal OX oscillator module.

Fig. 7-10. ICM OX crystal oscillator circuit.

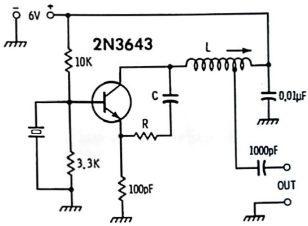

load. If you wish to feed a higher-impedance load, an output coupling capacitor can be connected at the junction of inductor L and capacitor C. However, the size of the coupling capacitor must be regulated so as not to place such a severe load on the circuit that oscillations will cease. This manner of connection provides a higher drive power when you wish to use the oscillator to drive a succeeding rf amplifier. The oscillator can be used as a signal source for a variety of QRP transmitter types.

For matching to a low-impedance antenna, it is preferable to use the 50-ohm output of the oscillator. You can make close-by local contacts with the limited output of the oscillator.

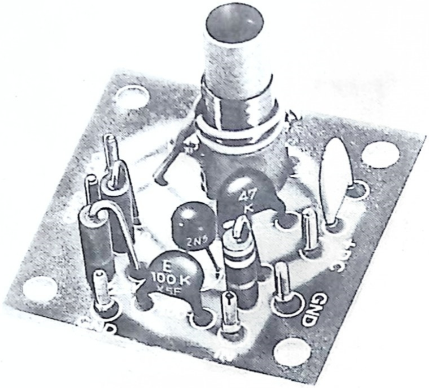

Fig. 7-11. International Crystal PAX-1 amplifier module.

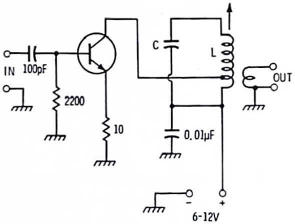

Fig. 7-12. ICM PAX-1 amplifier circuit.

Project 39. ICM RF Power Amplifier

International Crystal also supplies an rf power amplifier useful in QRP operations (Fig. 7-11). It covers the frequency span between 3 and 30 MHz with three separate coils that are

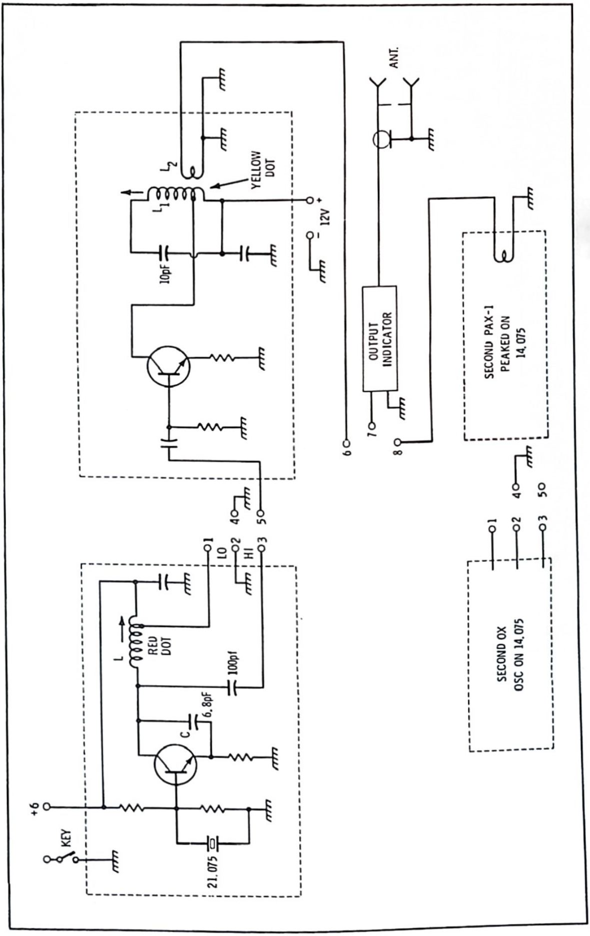

Fig. 7-13. Two-band QRP arrangement.

supplied with the kit. The coil-and-capacitor combination used depends on the desired frequency range. The schematic diagram is given in Fig. 7-12.

Output capability falls between 30 and 200 milliwatts depending on operating voltage and frequency. Input power (dc) is between 150 and 600 milliwatts depending on the dc operating voltage and frequency. Little drive is required, and the unit can be driven with the output of the small oscillator described in Project 38.

The circuit is straightforward and easy to assemble. The collector of the transistor is tapped on at a low-impedance point of the resonant circuit coil. The secondary winding provides a match to a low-impedance source such as a 50-ohm antenna system. Inductor L_1 includes a tuning slug that can be adjusted to maximize the output. Refer to Project 38.

The International oscillator and amplifier can be combined to form an effective MOPA QRP transmitter. A versatile arrangement is shown in Fig. 7-13. With binding posts and jumpers it is convenient to switch frequency and power. Four such individual units are shown in the photograph (Fig. 7-14) to provide operation on the QRP frequencies of 14.075 MHz and 21.075 MHz.

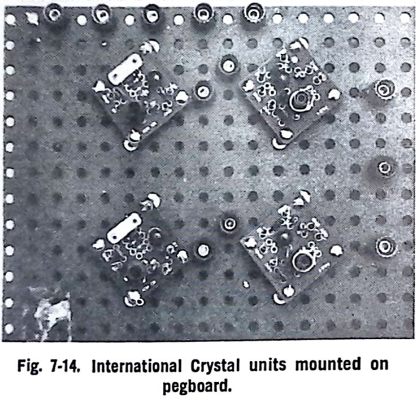

Fig. 7-14. International Crystal units mounted on pegboard.

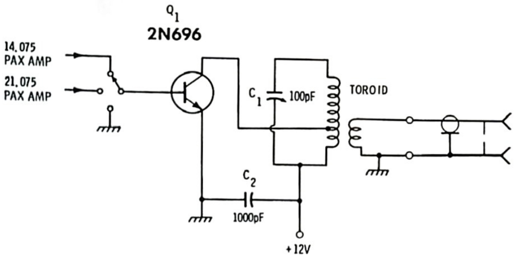

Fig. 7-15. Simple two-band amplifier for International Crystal modules.

Parts List—Two-Band Amplifier

No.	Item No.	Description
1	C_1	100-pF variable capacitor
1	C_2	1000-pF fixed capacitor
1	Q_1	2N696 transistor
1	L_1	Bifilar toroid, Project 24 (Micrometals T-50-2)
7		Binding posts
1		Transistor socket

The schematic diagram shows how the low impedance of the oscillator as well as its high-impedance drive output is brought out to individual binding posts. This makes it possible to jumper the high-impedance output of the oscillator to the input of the amplifier or the low-impedance output of the amplifier into the antenna system. The transmitter can be keyed in the negative supply voltage line. Output is peaked on individual frequencies by adjusting the slug in the oscillator coil and the amplifier coil. Use of four modules permits peak operation on both frequencies. It becomes a simple matter to change bands with the jumpers and binding posts. Refer to Project 38.

Project 40. Amplifier for International Crystal Modules

An additional amplifier can be used to boost the power output of the International Crystal modules in the arrangement of Figs. 7-13 and 14 for operation on the 15-meter and 20-meter QRP frequencies. The amplifier can be an inexpensive 2N696

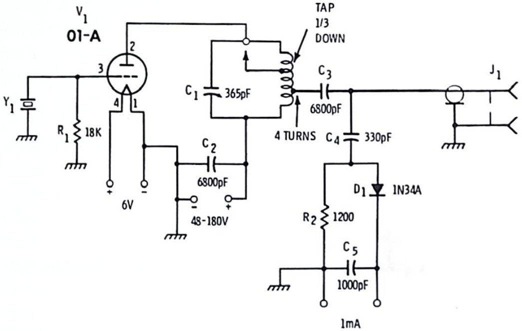

Fig. 7-16. Out-of-the-past schematic.

circuit (Fig. 7-15). A toroid coil and 100-pF variable capacitor form the resonant circuit. A proper choice of turns wound on the Micrometals T 50-2 core permit tuning over both the 15- and 20-meter bands with a single resonant circuit.

The bifilar toroid coil arrangement of Project 24 is used. The primary has 16 turns of No. 24 enameled wire, close-wound, and tapped at the 5th turn. The five turns of the secondary winding are bifilar wound between the five lower turns of the primary winding. The dc input power to the amplifier falls between 0.75 and 1 watt. Refer to Projects 1, 24, 38, and 39.

Project 41. Antique Oscillator

In bygone days QRP operation was commonplace. High-powered transmitters were in the minority. The antique 01-A vacuum tube was often used in the QRP rigs of those early hamming days. If you can resurrect one of these tubes you can put together the transmitter of Figs. 7-16 and 7-17. It will be quite a rag-chewing piece.

The 01-A uses a 5- to 6-volt filament supply. Substantial filament operating time can be obtained with a 6-volt lantern battery, or you may wish to build a power supply. However, *dc filament voltage* is required. Plate voltage as high as 180 volts can be employed. Three of the old-fashioned 45-volt batteries

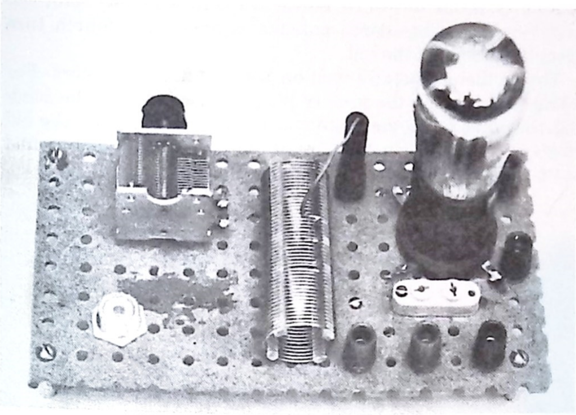

Fig. 7-17. Antique 01-A cw transmitter.

Parts List—01-A Oscillator

No.	Item No.	Description
1	C_1	365-pF variable capacitor
2	C_2, C_3	6800-pF capacitors
1	C_4	330-pF capacitor
1	C_5	1000-pF capacitor
1	D_1	IN34A diode
1	J_1	Coaxial receptacle
1	L_1	B&W 3015 or AIRDUX 8-16T coil
1	R_1	18K ½-watt resistor
1	R_2	1.2K ½-watt resistor
1	V_1	201-A or 301-A tube
8		Binding posts
1		Crystal socket
1		Four-prong tube socket

in series was the rule. You can obtain a good QRP output using four of the 12-volt lantern batteries in series; more with a 180-volt power supply.

A Miller crystal oscillator circuit is employed. A single coil provides 80- and 40-meter operation. The tap for 40-meter operation is about one-third down the coil. Takeoff point for matching a low-impedance antenna is about the fourth turn from the bottom of the coil.

The oscillator operates well on both 40 and 80 meters. For 40-meter operation the jumper plug is inserted into the binding post that holds the plate end of the coil. Any of the old tubes can be used in the circuit with proper filament and plate voltages. Put an antique signal on the air!

Section 8

QRP Antennas

Project 42. Dipoles

The antenna is an important part of a QRP installation. Best results are obtained with a high-gain antenna that is mounted high and clear. Some results can be obtained with shorter and simpler antennas but these limit range and consistent performance. Strive for at least a full dipole length. High quarter-wavelength verticals with ground planes or low quarter-wave verticals with radial systems can be effective. (In effect, they act as half-wavelength verticals.)

Antenna-system matching is of importance. Acceptable lines are the 50-ohm and 70-ohm coaxial or the 300-ohm ribbon. The output arrangement of Fig. 8-1 has performed well with a variety of antennas. Good matching is obtained to 50-, 70-

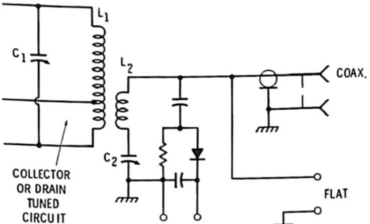

Fig. 8-1. Output coupling and indicator circuit.

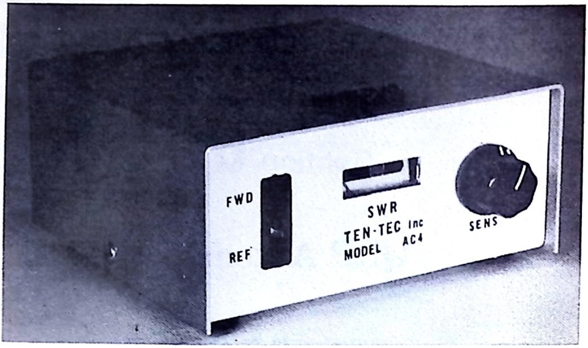

Fig. 8-2. TEN-TEC low-power SWR meter.

and 300-ohm lines. Such an output arrangement is used in most of the QRP circuits covered in the book.

The best type of output indicator is also shown in Fig. 8-1. Many SWR meters are not sensitive enough for antenna system tuning when using such very low power. However, Ten-Tec does make available a small SWR meter that will respond to rf powers down to as low as one-half watt (Fig. 8-2).

If antennas are cut to the dimensions given in Projects 42 through 50, the output coupling arrangement of Fig. 8-1 will provide suitable matching. Acceptable performance is obtained without the use of the resonant output capacitor (C_2), although it is of definite help in peaking the coupling system on a specific frequency.

There are variables that do influence the resonant length of an antenna. If antenna trimming is necessary with an SWR meter or other tuning device, the regular station transmitter can be used for this purpose.

The ideal dipole arrangement is shown in Fig. 8-3. A dipole is an electrical half wavelength long. Because of end effect, it must be made somewhat shorter than a free-space half wavelength. Theoretically when a transmission line is matched precisely to the antenna and its opposite end precisely to the transmitter, the actual length of the transmission line is not critical. However, ideal match is difficult to attain and it is appropriate for only a particular or narrow band of frequencies. As a result in amateur operations there are sure to be some

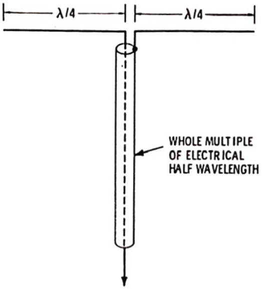

Fig. 8-3. Dipole antenna and transmission line.

standing waves on the transmission line. Low as this SWR might be, the performance of the antenna system is enhanced when the overall length of the transmission line is made some multiple of an electrical half wavelength.

Dipole dimensions for the various bands ten through eighty meters are given in Chart 8-1. Since the bulk of QRP operations is on cw, dimensions are based on the cw ends of the various bands. In most instances the antennas also perform well up into the phone segments.

QRP operations on the top band (160 meters) are exciting and increasingly popular. A separate chart (Chart 8-2) provides 160-meter data so you can choose a length suitable to the allocations in your area.

The charts also provide recommended lengths of transmission lines based on velocity factors of 0.66 and 0.81 for coaxial lines. The 0.81 figures are also reasonably appropriate for use of 300-ohm ribbon line. These line dimensions are not repeated in succeeding topics but you can refer back to them to obtain line lengths for the various types of antennas covered.

Chart 8-1. Dipole Dimensions Favoring CW Portions of the 10- Through 80-Meter Bands

Resonant Frequency	Antenna		Coaxial Line (λ/2)	
	λ/2	λ/4	0.66	0.81
3.65	128′3″	64′1″	88′11″	109′2″
7.1	65′11″	32′11″	45′9″	56′2″
14.1	33′2″	16′7″	23′	28′3″
21.125	22′2″	11′1″	15′5″	18′10″
28.25	16′7″	8′3½″	11′6″	14′1″

Chart 8-2. 160-Meter Dipole Dimensions

Resonant Frequency	Antenna		Coaxial Line (λ/2)	
	λ/2	λ/4	0.66	0.81
1.81	258'6"	129'3"	179'4"	220'2"
1.82	257'2"	128'7"	178'5"	218'11"
1.84	254'3"	127'2"	176'6"	216'6"
1.86	251'8"	125'10"	174'6"	214'3"
1.88	248'11"	124'5"	172'9"	211'11"
1.9	246'4"	123'2"	170'11"	209'9"
1.92	243'9"	121'11"	169'1"	207'6"
1.94	241'3"	120'7"	167'3"	205'5"
1.96	238'9"	119'5"	165'9"	203'4"
1.98	236'4"	118'2"	163'11"	201'3"
1.99	235'2"	117'7"	163'3"	200'3"

Project 43. Quarter-Wavelength Vertical

The fundamental vertical antenna is a quarter-wavelength radiator, Fig. 8-4A. This is not a true vertical dipole because the physical length of the antenna approximates just one-half of a vertical dipole. In the case of the basic quarter-wave vertical, the ground acts as a mirror quarter-wave segment. Ground conditions, in fact, have an influence on the performance of the vertical antenna. The mirror segment can be ground itself or it may be a network of wires or conducting tubing that acts as a low-resistance ground. This can be in the form of wires placed beneath the surface fanning out from the base of the vertical (Fig. 8-4B), or, in the form of a synthetic ground (called a ground plane) when the quarter-wavelength radiator is positioned high above the physical ground (Fig. 8-4C). In effect, the ground plane brings the ground up to the level of the antenna.

A simple arrangement that works out quite well is shown in Fig. 8-5. This consists of a 4- to 6-foot ground rod and a quarter-wavelength radiator that is insulated from ground. The insulator can be of plastic, wood, or glass. A wood 2 by 3 can serve as a solid support for the radiator itself.

Quarter-wave vertical dimensions are given in Chart 8-3. Emphasis is on the cw portions of the various bands. The radiator itself can be made of telescoping antenna elements or even a telescoping TV mast.

Telescoping permits operation on more than one band. For example the dimensions given in Fig. 8-6 can be used to set up telescoping 10-, 15-, or 20-meter verticals. Refer to Project 42.

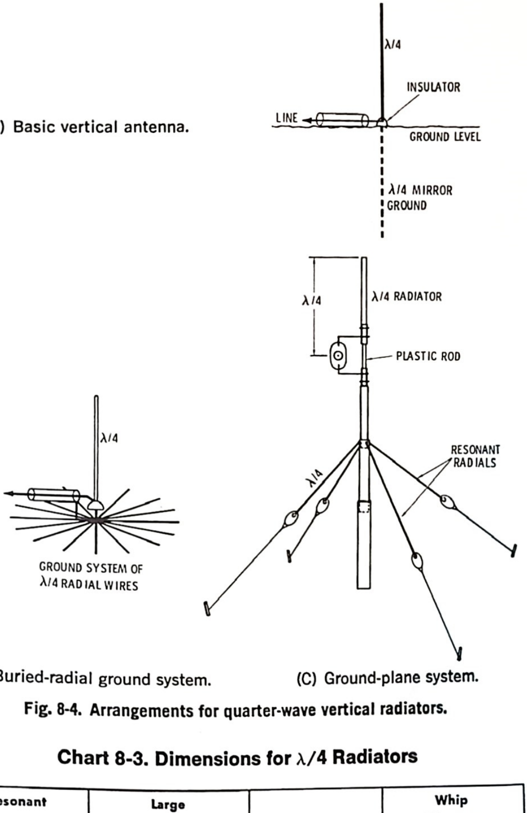

(A) Basic vertical antenna.

(B) Buried-radial ground system.

(C) Ground-plane system.

Fig. 8-4. Arrangements for quarter-wave vertical radiators.

Chart 8-3. Dimensions for λ/4 Radiators

Resonant Frequency	Large Cross Section	Regular	Whip Diameter
3.65	63′3″	64′1″	—
7.1	32′6″	32′11″	—
14.1	16′4″	16′7″	17′2″
21.125	10′11″	11′1″	15′5″
28.25	8′2″	8′3½″	8′8″

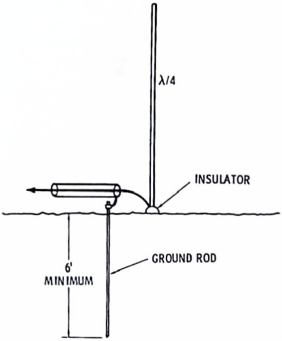

Fig. 8-5. Simple quarter-wave vertical antenna.

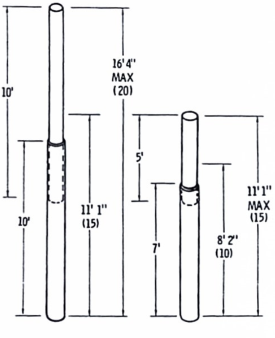

Fig. 8-6. Two-band telescoping vertical antennas.

Project 44. Inverted Dipole

The inverted dipole (Fig. 8-7) is a very popular ham antenna. Fundamentally it is a dipole with its far ends nearer to ground than the antenna center. Thus it requires but a single mast for erection. Usually its overall performance is somewhat better than a straight horizontal dipole except its gain does not quite reach the peak values obtained by the two broadside maximum lobes of the horizontal dipole. However, its radiation is quite good in terms of contacts to be made with stations using vertical antennas or with mobile stations.

Dimensions are given in Chart 8-4. If multiband operation is desired it is simple to use additional insulators and jumpers

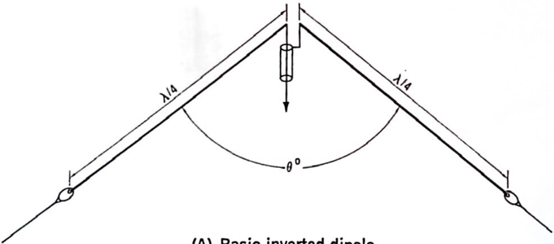

(A) Basic inverted dipole.

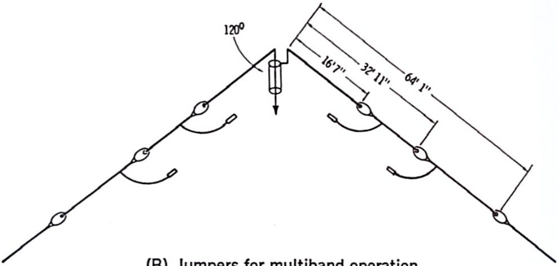

(B) Jumpers for multiband operation.

Fig. 8-7. Inverted-dipole type antennas.

so that the antenna resonances can be changed quickly among bands. Such an antenna for 20-, 40-, and 80-meter operation is shown in Fig. 66B. A typical insulator and alligator-clip jumper is shown in Fig. 8-8.

The actual length of each quarter-wavelength side also depends on the angle between the two sides. The smaller the angle, the greater must be the leg length for a given resonant frequency (Fig. 8-9). This factor is considered in Chart 8-4. Refer to Project 42.

Chart 8-4. Inverted-Dipole Dimensions

Resonant Frequency	Apex Angle (Degrees)			
	75	90	105	120 up
3.65	66'8"	65'2"	64'4"	64'1"
7.1	34'2"	33'6"	33'1"	32'11"
14.1	17'3"	16'10"	16'8"	16'7"
21.125	11'6"	11'3"	11'2"	11'1"

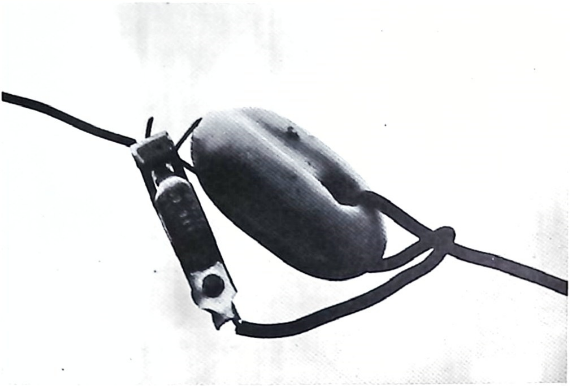

Fig. 8-8. Insulator and jumper.

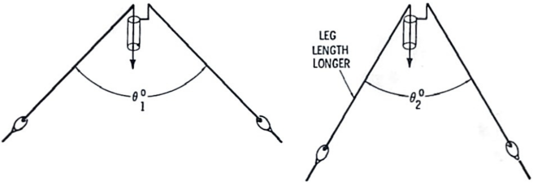

Fig. 8-9. Influence of apex angle θ on leg length.

Project 45. Inverted-Vee Long Wire (120°)

If higher gain is desired, you can obtain it by increasing the leg length of the inverted-vee style. If the inverted vee is center-fed, resonant points are to be found when the leg lengths are an electrical three quarter-wavelengths, five quarter-wavelengths, seven quarter-wavelengths, nine quarter-wavelengths, etc. Such an antenna has a higher end gain as compared to an inverted dipole. Thus in erecting the inverted-vee long wire make certain the two ends face in your two favored directions (Fig. 8-10).

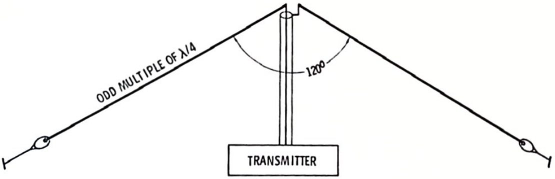

Fig. 8-10. Inverted-vee antenna.

Dimensions are given in Chart 8-5. Refer to Projects 42 and 44.

Chart 8-5. Inverted-Vee Dimensions

Resonant Frequency	Leg Length			
	3/4λ	5/4λ	7/4λ	9/4λ
3.65	194'3"	–	–	–
7.1	100'	169'	–	–
14.1	50'4"	85'1"	119'3"	153'11"
21.125	33'8"	56'10"	79'6"	102'9"
28.25	25'2"	42'6"	59'6"	76'10"

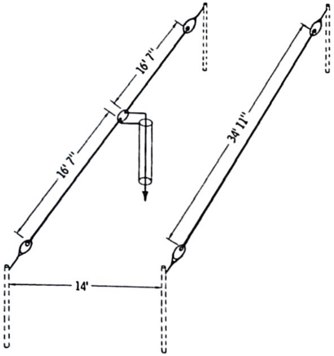

Fig. 8-12. Twenty-meter dipole and reflector.

Project 46. Two-Element Beam

Additional gain can also be obtained by adding a reflector to a dipole. The reflector is made approximately 5 percent longer than the dipole. Maximum signal is then radiated along a perpendicular line that extends from the reflector through the driven dipole (Fig. 8-11). A good separation for QRP operation is approximately 0.2λ. This is an optimum that does not result in a severe drop in the antenna resistance. As a result, no additional matching arrangement is needed when using 50-ohm coaxial line. The coupling arrangement of Fig. 8-1 performs well.

Dimension data is given in Chart 8-6. Bands 10 through 80 meters are covered. Refer to Project 42.

Chart 8-6. Dimensions for Dipole and Reflector

Resonant Frequency	λ/4 Drive Segment	Reflector	Spacing 0.2λ
3.65	64′1″	134′10″	53′11″
7.1	32′11″	70′9″	27′9″
14.1	16′7″	34′11″	14′
21.125	11′1″	23′3″	9′4″
28.25	8′3½″	17′5″	7′

Project 47. Three-Element Beam

Three-element beams provide additional gain (Fig. 8-12). They are larger and require more erection space. Some form of antenna-matching arrangement is preferable. The antenna of Fig. 8-12 has been cut for 15 meters. Matching is accomplished by making the antenna element slightly capacitive and using a coaxial transmission-line segment to bring the feed point to resonance with an antenna resistance that matches the feed line to the transmitter. QRP results were excellent

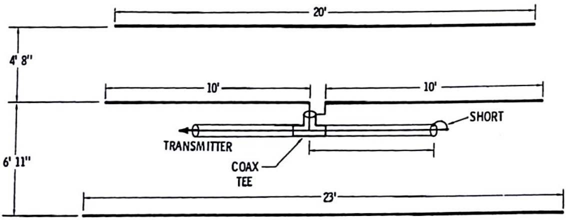

Fig. 8-11. Three-element 15-meter beam.

with contacts to the West Coast using 100 mW, and across the Atlantic by using ¼ watt. Refer to Projects 42 and 46.

Project 48. Two-Element Quad

The two-element quad has been a popular DX antenna. It consists of a full-wavelength driven element in a perfect square and a longer but similarly shaped reflector (Fig. 8-13). Optimum gain spacing between driven element and reflector is approximately $\lambda/8$ (0.125 wavelength). On 20 meters this would be 8 to 10 feet. Quad frames are constructed variously with bamboo, aluminum cross pieces with end insulators, and *fiberglas*.

Fig. 8-13. Twenty-meter 2-element quad

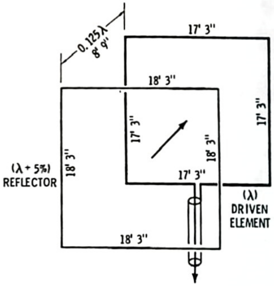

The overall wire length for the driven element can be determined as follows:

$$\text{Wire length} = 1\lambda = \frac{984}{f(\text{MHz})} \text{ feet}$$

In the construction of multielement and/multiband quads, it is wise to lengthen the quad driven element and the equation is modified to:

$$\text{Driven element wire length} = \frac{1000}{f(\text{MHz})}$$

The driven wire can then be cut back to the desired resonant frequency, if necessary.

Wire length for the quad reflector is made 5 percent longer than the driven element. Dimensions for the 20-meter, two-element quad are given in Fig. 8-13. The added reflector is handled by using a larger frame. Dimensions for other bands are as follows:

Chart 8-7. Quad Dimensions, with Reflector

BAND (METERS)	DRIVEN 984/f	REFLECTOR 1030/f_L	SPACING 123/f
10	34'5"	36'5"	4'4"
15	46'3"	48'10"	5'9"
20	69'3"	73'1"	8'9"
40	136'8"	147'	17'6"

Various procedures can be used to resonate the driven element of a quad to a specific frequency. A dip meter along with a calibrated receiver affords a convenient and accurate combination for checking resonance. A single-turn loop connected from one side of the quad insulator to the other and around the dip-meter coil is all the coupling that is required (Fig. 8-14A). The dip point is located on the meter. Next the dip-oscillator signal is picked up on the receiver to obtain an accurate frequency measurement.

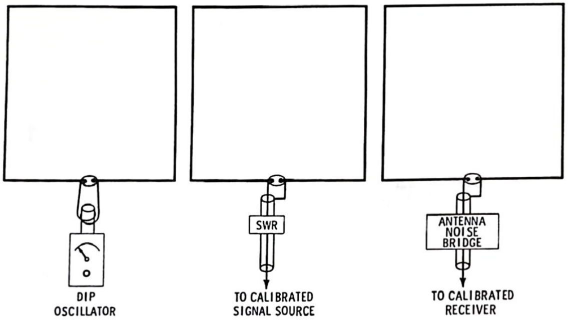

Fig. 8-14. Resonating a quad antenna.

Two other methods of checking resonance are also given. An SWR meter can be located right at the feed point of the driven element (Fig. 8-14B). Resonance is that frequency at which the SWR reading is minimum. The SWR meter can also be located at the transmitter to make this arrangement, provided the overall length of the transmission line is a multiple of an electrical half wavelength.

The third method is to position an antenna bridge right at the feed point (Fig. 8-14C). This signal is delivered to the receiver at the other end of the line. There is a minimum reading when the receiver is tuned through the resonant frequency of the driven quad.

Either the dip method or the antenna noise bridge can also be used to tune the reflector. To do so, provide some means of opening the reflector loop at a position comparable to the feed point of the driven element. Customarily the reflector wire length is 5 percent longer than that of the driven element. Consequently, reflector resonant frequency will be on a frequency 5 percent lower than the resonant frequency of the driven element:

$$f_{\mathrm{refl}} = f_{\mathrm{res}} - 0.05 f_{\mathrm{res}}$$

When this approach is used, it is possible to counteract the influence that one frame has on the other in terms of the resonant frequency. This approach is particularly useful for multiband quads for tuning out the interaction between frames and among the multiband wires on each frame.

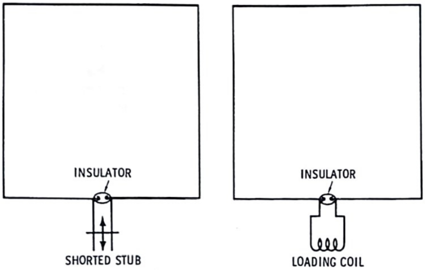

Fig. 8-15. Quad driven element and director.

The dip oscillator and noise-bridge approach can be used to find the resonant frequency. However, the SWR technique is not feasible because the resonant points usually fall outside the radio amateur bands.

Project 49. Two-Element Quad, Director

It has been the author's experience that a parasitic quad director tunes easier and results in a higher gain and a better pattern than a quad driven element and reflector combination. Of course, stub tuning or the use of a series coil are not appropriate for a director. The director effect is obtained by making the length 5 percent less than that of the driven element (Fig. 8-15). Dimensions for various amateur bands are:

Chart 8-8. Quad Dimensions, with Director

BAND	DRIVEN 984/f	DIRECTOR $935/f_H$	SPACING 123/f
10	34′5″	32′4″	4′4″
15	46′3″	43′7″	5′9″
20	69′3″	65′2″	8′9″
40	136′8″	128′	17′6″

Spacing between director and driven element is $\lambda/8$ (0.125λ). The match to a 70-ohm coaxial line is almost ideal.

Project 50. Triangle

On low frequencies the popular quad type of antenna becomes large, clumsy, and almost impossible to construct. However, some of its favorable characteristics can be obtained using a triangular driven element (Fig. 8-16). The triangular construction is simple, strong, and easy to erect. It performs well as a QRP antenna and reaches out well for rather long distance communications on the 40-, 80- and 160-meter low-frequency bands.

The very center of the full-wavelength wire is attached at the top of the support mast with an insulator. The two legs then fan out and fold back on themselves. The ends are returned to the mast and connected to a dipole connector or other form of insulator. The triangle can then be stretched out on each side using plastic clothesline (nonmetallic core) and two metal fence posts. Nylon rope can also be employed.

Dimensions are given in Chart 8-9. The proximity of ground and the support mast may require that the triangle be shortened somewhat below these values. In most instances this is not necessary because the coupling arrangement of Fig. 8-1 tunes the transmission line system quite well.

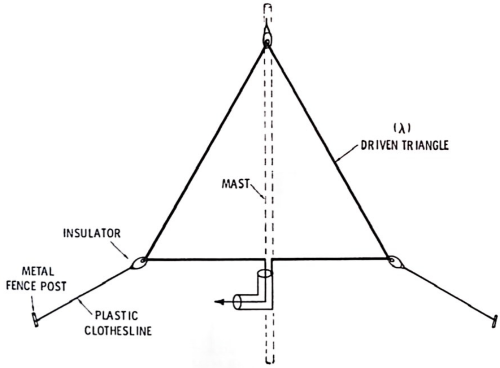

Fig. 8-16. Triangle antenna.

Chart 8-9. Triangle Dimensions

Resonant Frequency MHz	Driven Element (λ)
1.81	543'6"
3.65	269'7"
7.1	138'8"
14.1	62'8"

Project 51. Double Triangle

Two triangles can be combined to permit two-band operation. A 40- and 80-meter combination is shown in Fig. 8-17. Short lengths of transmission line are run from the feed point of each triangle to a coaxial tee connector. A single transmission line then runs between the tee connector and the QRP transmitter. Band change is then possible without making any antenna change. At the same time the two antennas occupy a

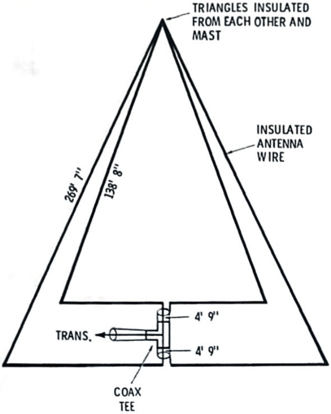

Fig. 8-17. 40-80 triangle.

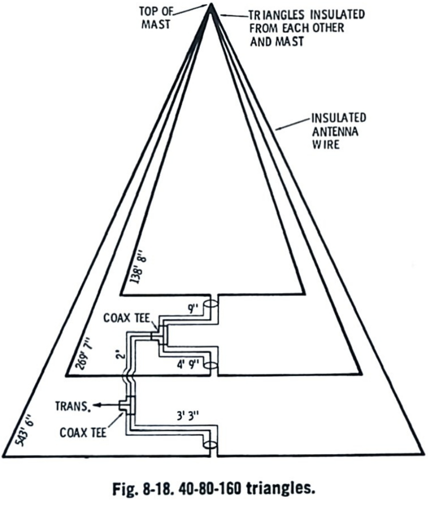

Fig. 8-18. 40-80-160 triangles.

limited space, and are both supported by the same mast. Refer to Project 50.

Project 52. Triple Triangle

The triple triangle construction of Fig. 8-18 was our most effective QRP antenna for operation on 40, 80, and 160 meters. Fortunately the space was available for the erection of a 160-meter triangle. The 40-, 80-, and 160-meter triangles were mounted on the same mast with their triangle tops at the same level. All three tops were insulated from each other and the mast (Fig. 8-18). This is no problem with the use of insulated antenna wire.

Two coaxial tee connectors were employed. One connector joins the 40- and 80-meter triangle to a common point. A second connector joins this common point to the 160-meter triangle. Here the transmission line is attached which runs between the triangle array and the QRP transmitter. No matching is necessary and the SWR can be made almost ideal with some trimming. Refer to Projects 42, 50, and 51.

ADDRESSES OF SUPPLIERS

HEP Transistors
ALLIED RADIO
100 North Western Avenue
Chicago, IL 60680

Siliconix Transistors
2201 Laurelwood Road
Santa Clara, CA 95054

Sideband Filter
Spectrum International
Box 87
Topsfield, MA 01983

Permacor
9540 Tulley Avenue
Oak Lawn, IL 60453

Micrometals
72 East Montecito Avenue
Sierra Madre, CA 91024

Ami-Tron Asso.
12033 Otsego Street
North Hollywood, CA 91607

Ten-Tec Inc.
Sevierville, TN 37862

International Crystal Mfg. Co.
10 North Lee
Oklahoma City, OK 73102

SOLID-STATE QRP PROJECTS

by Edward M. Noll, W3FQJ

Amateurs in almost all European countries have been seriously investigating the advantages of hamming with reduced power for some time. Now the "CQ QRP" call is heard more and more on the amateur bands in the United States.

This trend is good for a number of reasons. The lack of "home-brewing" amateur equipment is cause for some of the criticism of amateur operators today. QRP equipment building offers an excellent opportunity for the ham to acquaint himself with solid-state technology, because most QRP rigs include transistors and/or integrated circuits.

SOLID-STATE QRP PROJECTS encourages this trend. The units included have power ratings from less than 100 milliwatts up to about 20 watts. Both cw and phone rigs are included. Multistage cw, a-m, and ssb transmitters can be constructed from the combination of projects described in this book.

The emphasis is on solid-state. Bipolar transistors, field-effect transistors, and integrated circuits are the main components. The financial burden is light in terms of knowledge gained, fun to be had, and the satisfaction of being able to say "the equipment here is all home-brewed."

No extensive knowledge of electronics is required, but a great deal of operating skill must be developed to utilize the equipment efficiently. The serious experimenter will find in **SOLID-STATE QRP PROJECTS** units to fill many hours of pure enjoyment. Come on and join the act.

ABOUT THE AUTHOR

In addition to being an accomplished author of technical books, lessons, articles, and instruction manuals, Ed Noll is also a consulting engineer and lecturer. His other books include:

73 Dipole and Long-Wire Antennas

73 Vertical, Beam, and Triangle Antennas

Ham and C B Antenna Dimension Charts

First-Class Radiotelephone License Handbook

Second-Class Radiotelephone License Handbook

Radar License Endorsement Handbook

Radio Operators License Handbook

all published by
Howard W. Sams & Co., Inc.

EDITORS AND ENGINEERS

24024
$4.25 (In Canada $5.10)